SECTION 4 - FUEL SYSTEM

MERCURY
SNOWMOBILES

PART A - CARBURETION

MERCURY
MARINE

INDEX

"MD" CARBURETOR - MODELS 220-250

TROUBLE CHART

Trouble	Possible Cause	Remedy
Carburetor floods	Dirt or foreign particles preventing inlet needle from seating	Flush out inlet seat. Wipe inlet needle with soft cloth
	Worn inlet needle	Remove and replace with a new inlet needle and seat assembly
	Incorrect float setting	Reset float to correct level
	Bowl vent plugged	Blow out with compressed air after removing bowl to avoid crushing the float
Engine will not idle	Idle by-pass tube plugged	Blow out with compressed air
	Idle channels plugged	Blow out with compressed air
	Idle by-pass holes plugged	Blow out with compressed air
	Incorrect idle setting	Readjust to manufacturer's specifications
Engine will not accelerate	Float level is low	Reset to correct level
	Incorrect idle and main adjustments	Readjust to manufacturer's instructions
	Main nozzle is damaged	Remove and replace
	Main orifice is plugged	Blow out with compressed air
Engine runs lean	Float set too low	Reset float to correct level
	Restricted fuel flow to carburetor	Check fuel line to carburetor to see that a full fuel flow is maintained
	Main orifice plugged	Blow out with compressed air
	Main nozzle damaged	Remove and replace
	Incorrect main adjustment	Readjust to manufacturer's specifications
Engine runs rich	Float set too high	Reset to proper level
	Carburetor floods	(See above measures taken to correct this condition)
	Incorrect main fuel adjustment	Readjust to manufacturer's specifications

NOTE: In making carburetor adjustments, turn adjustments carefully and gently. Do not ram adjustments into seats.

GENERAL

1. The "MD" series carburetor has been kept basically simple for ease of service (Figure 1)

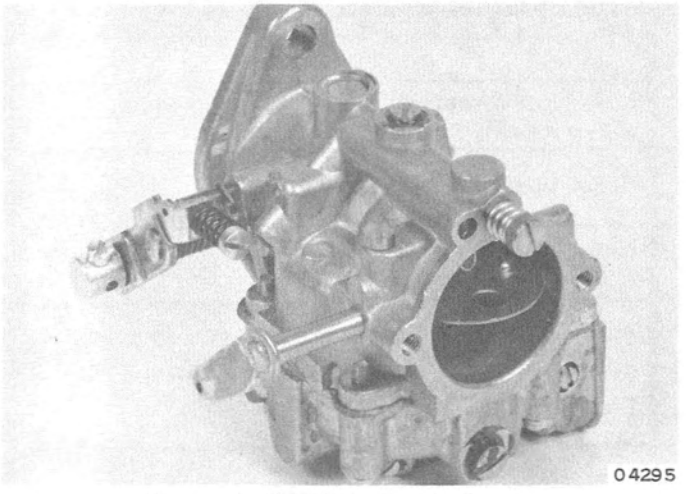

Figure 1. "MD" Series Carburetor

2. It is tested, adjusted and calibrated at the factory to meet engine requirements.
3. Use only clean gasoline and compressed air to clean passages and discharge holes. Refer to "Cleaning and Inspection", following.

NOTE: NEVER use wire or other pointed instruments to clean passages or orifices, or calibration of carburetor will be affected.

Inlet Needle and Seat: A constant gasoline level in the bowl and all channels of this carburetor is maintained by inlet needle and seat assembly and float.

Idle and Slow Speeds: Fuel, reaching its level in the carburetor, passes main fuel jet to the idle tube. High manifold vacuum of throttle shutter draws fuel upward thru idle tube outlet orifice where it mixes with air which is adjusted to requirements by idle mixture screw. It then enters air stream at idle discharge ports where it mixes with additional air which passes the slightly opened throttle shutter.

High Speeds and Full Power: When engine is pulling a load, throttle shutter has opened further, thus reducing suction and minimizing fuel discharge at idle discharge ports and increasing air flow to a high velocity thru the venturi. This air draws fuel, supplied from the bowl, thru the main nozzle. As engine speed or load increases, air is bled automatically into the main nozzle air bleed which causes a proper proportion of fuel and air to be metered at that speed range.

ADJUSTMENTS

GENERAL

1. Thoroughly warm up engine. If engine is cold, allow to run for at least 15 minutes.
2. Inspect torque of carburetor to manifold assembly nuts (130 in. lbs.) and manifold to crankcase nuts (75 in. lbs.) to exclude possibility of air leaks.
3. Adjust idle RPM between 1250-1350, as indicated on Service Tachometer (C-91-31591).
4. Adjust idle mixture screw outward (counterclockwise) until engine starts to "load up" and slow down or fire unevenly because of an over-rich mixture. (Figure 1)
5. At this point, turn idle mixture screw inward (clockwise) until engine picks up speed and fires evenly.
6. Do not adjust leaner than necessary to attain reasonably smooth idling. It is preferable to set mixture a little rich than too lean. When adjusting idle mixture, turn needle approximately 1/8-turn at a time, then wait sufficient time for engine to respond to this adjustment.

FLOAT LEVEL

1. Separate fuel bowl assembly from upper body assembly by removing body retaining screws and lockwashers.
2. With fuel bowl assembly held in upside-down position, the lowest point of the float, at free end, should project 1/64" (.39mm) below the rim of the float bowl. (Figure 2)
3. If adjustment is required, remove float and bend vertical float level tang. (Figure 3)
4. If inspection indicates fuel level continues to rise beyond float setting point, proceed as follows:

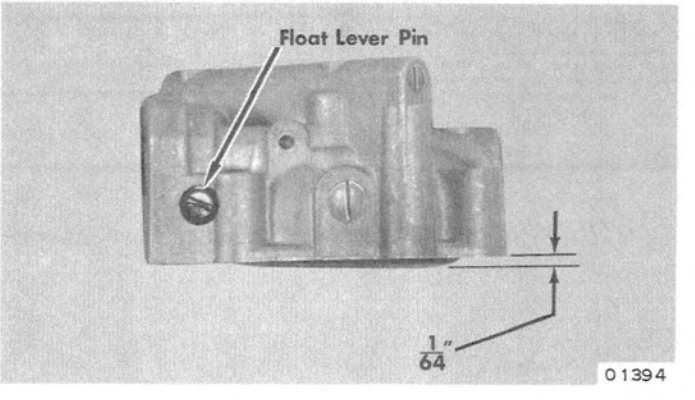

Figure 2. Float Level Adjustment

a. Remove inlet needle and seat and clean mating surfaces with a clean, soft cloth.
b. Reinstall inlet needle in seat, being careful not to force needle into seat, as this may cause sticking.
c. If proper fuel level is not maintained, install a new needle and seat assembly.

DO NOT CHANGE FLOAT LEVEL FROM RECOMMENDED SPECIFICATIONS.

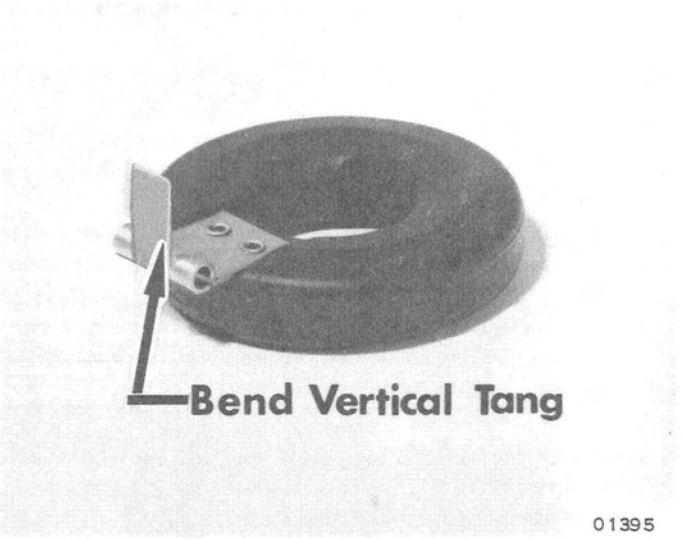

Figure 3. Float Level Vertical Tang

DISASSEMBLY

1. Remove body retaining screws and lockwashers and separate upper body and fuel bowl assembly.
2. Remove float lever pin and float from fuel bowl. (Figure 4)
3. Remove large plug screw, then inlet needle, seat and gasket from fuel bowl. (Figure 4)
4. Remove idle mixture screw, spring, idle tube and idle tube gasket. (Figure 5)

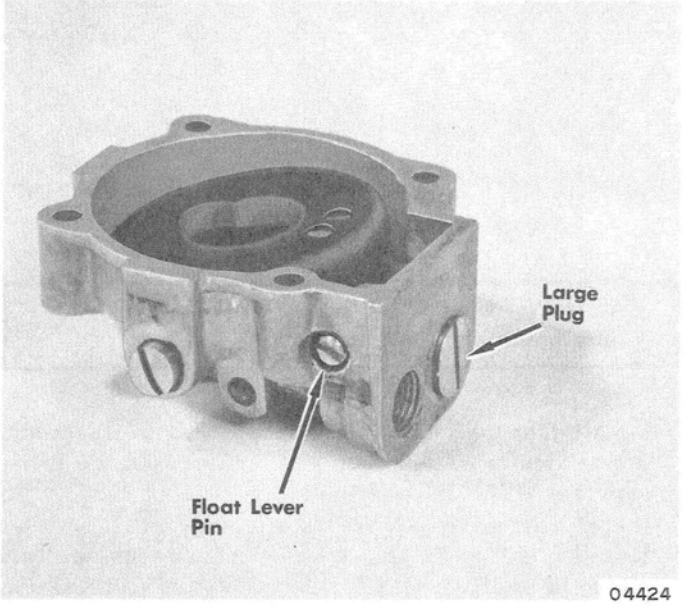

Figure 4. Float Bowl Components

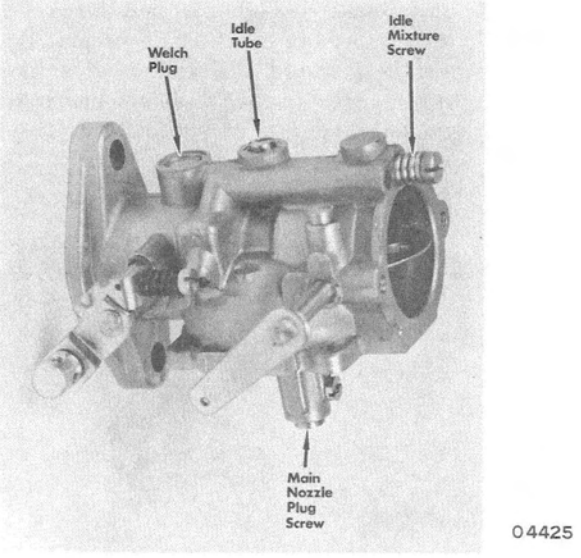

Figure 5. Upper Body Components

5. Remove main nozzle channel plug screw. (Figure 5)
6. Remove welch plug to inspect by-pass holes. (Figure5)

   NOTE: Do not remove welch plug if new plug is not available. Welch plug is included in Carburetor Repair Kit.

7. Remove throttle shutter and shaft.
8. Choke shutter, shaft and lever should not require removal or replacement unless they are accidentally damaged or broken.

CLEANING and INSPECTION

Dirt, gum, water or carbon contamination in or on exterior moving parts of carburetor often is responsible for unsatisfactory performance. For this reason, efficient carburetion depends upon careful cleaning and inspection while servicing.

1. Thoroughly clean carburetor castings and metal parts in clean carburetor cleaning solvent.

> **CAUTION: Float, inlet needle and seat never should be immersed in carburetor cleaner. Wash in clean gasoline only.**

2. Blow out fuel inlet connection and all fuel channels. *NOTE: DO NOT USE wires or drills for cleaning passages or orifices.*
3. Blow out main nozzle and main air bleed tube in body casting. It is not necessary to remove the main nozzle from upper body casting, unless visual inspection reveals damage from careless handling.
4. Check all parts for wear. If worn, defective parts must be replaced. Note the following in particular:
   a. Check inlet needle and seat for wear. If wear is noted, assembly must be replaced.
   b. Check float hinge and float lever pin for wear.
   c. Check throttle shaft bore for wear and out-of-round in body casting.
   d. Inspect idle mixture adjusting screw for burrs or grooves. Such a condition requires replacement.
   e. Replace old gaskets. Gaskets become brittle and hard and should not be reused.

REASSEMBLY

1. Install inlet seat and needle and large plug screw.
2. Install float assembly and float lever pin. Be sure that float lever is inserted thru U-shaped spring in blunt end of inlet needle so that float movement will control the inlet needle. (Figure 6)

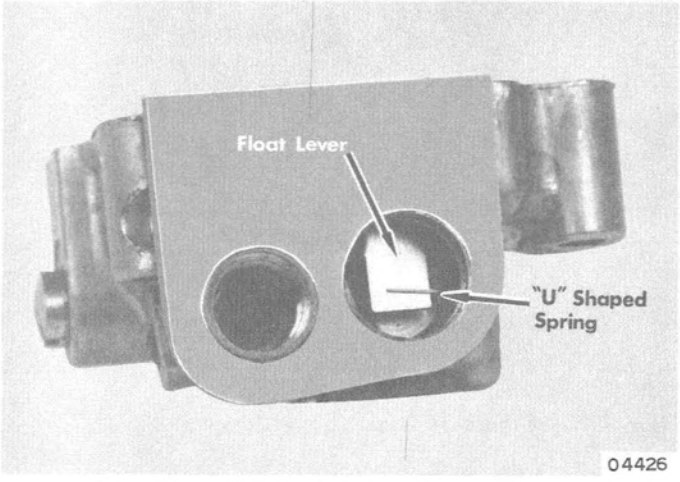

Figure 6. Positioning Needle and Float

3. Check float level as outlined under "Float Level Adjustment", preceding.
4. Install new welch plug in recess over by-pass holes in upper body assembly.
5. Install throttle shaft and shutters, securing throttle shaft with washer, lockwasher and screw.
6. Loosen throttle shutter screws before tightening throttle shaft screw. Back idle speed screw out until throttle shutter is completely closed, then tighten shutter screws. (Figure 7)

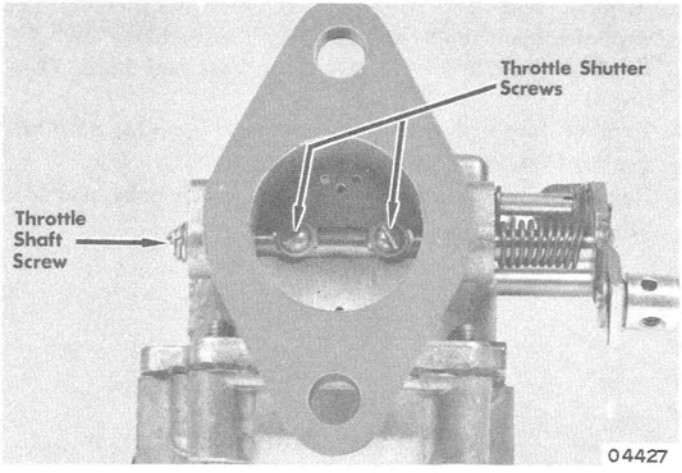

Figure 7. Manifold Side of Carburetor

> **CAUTION: Check for sticking throttle shutter before installing on engine.**

7. Install idle tube and gasket in upper body assembly. After installing, blow out with compressed air to insure that all chips are removed.
8. Install main nozzle channel plug screw.
9. Install idle mixture adjustment screw and spring. Turn screw in until it seats lightly, then back out 1¼-turn.
10. Reassemble bowl to upper body. Use new gasket.
11. Install on engine and adjust idle speed and mixture as outlined under "Adjustments", preceding.

CARBURETOR

MODELS 200, ROCKET (339cc) and LIGHTNING (398cc)

GENERAL

Models 200, Rocket (339cc) and Lightning (398cc) Snowmobiles use a Tillotson HR series carburetor. The diaphragm-controlled metering system accurately meters fuel with high vibration and at extreme angles.

TROUBLE CHART

Trouble	Possible Cause	Remedy
Carburetor floods	Dirt or foreign particles preventing inlet needle from seating	Clean or replace the inlet needle and seat
	Stuck inlet lever	Replace or clean
	Spring not seated on lever dimple	Correct the assembly
	Diaphragm improperly installed	Correct or replace
	Plugged air filter	Clean filter
	Faulty choke stop, allowing choke to close	Replace choke shaft assembly
	Fuel tank pressure build-up	Check tank vent
	Inlet lever adjusted too high	Adjust flush with chamber floor
Engine will not accelerate	Idle mixture too lean	Readjust
	Low inlet lever setting	Adjust flush with chamber floor
	Carburetor loose on manifold	Tighten
	Diaphragm cover plate loose	Tighten cover plate screws
	Diaphragm gasket leaking	Replace gasket
	Fuel channels plugged	Clean carburetor
	No fuel	Fill fuel tank
Engine will not idle	Incorrect adjustment	Readjust
	Fuel channels plugged	Clean carburetor
	Inlet lever set incorrectly	Set flush with chamber floor
	Sticking inlet needle or lever	Replace or clean
	Pump pulse hole not aligned with flange hole	Align
	Throttle shutter cocked in throttle bore, causing fast idle	Adjust shutter position
	Faulty nozzle check cage	Replace nozzle assembly
	Welch plug does not seal	Replace welch plug
	Diaphragm vent plugged	Clean
	Tank vent not operating	Repair
Engine runs out lean	Fuel line plugged	Clean fuel line
	Leak in fuel system from tank to pump	Replace line
	Pump pulse hole plugged or not aligned with engine pulse hole	Clean or correct alignment
	Pump valve flippers damaged or bent off ports	Replace pump diaphragm
	Dirty inlet screen	Clean filters
	Clogged fuel channels	Clean carburetor
	Incorrect inlet lever adjustment	Set lever flush with chamber floor
	Low fuel supply	Fill fuel tank
Carburetor runs rich with mixture screw shut off	Welch plugs not sealing	Replace welch plugs
	Ruptured pump diaghragm	Replace pump diaphragm
	Carburetor flooding	See above

ADJUSTMENTS

GENERAL

The high speed and idle mixture screws have normal right hand screw threads. Turn clockwise to close (lean the mixture) and counterclockwise to open (enrich the mixture). The starting adjustment opening for a new unit (or a carburetor that has not been run on the engine) is one full turn open on both high speed and idle mixture screws.

The idle speed screw should be adjusted to open throttle shutter a small amount. This adjustment should be made carefully, since very high idle speed may cause the clutch to engage and the vehicle may start to move.

Open fuel line shut-off valve, if so equipped, and close the choke shutter. Open throttle about ¼ of full travel and firmly pull starting cord until engine fires. Open choke shutter enough to allow engine to idle until warmed up so that it runs continuously with choke fully open. Do not race a cold engine.

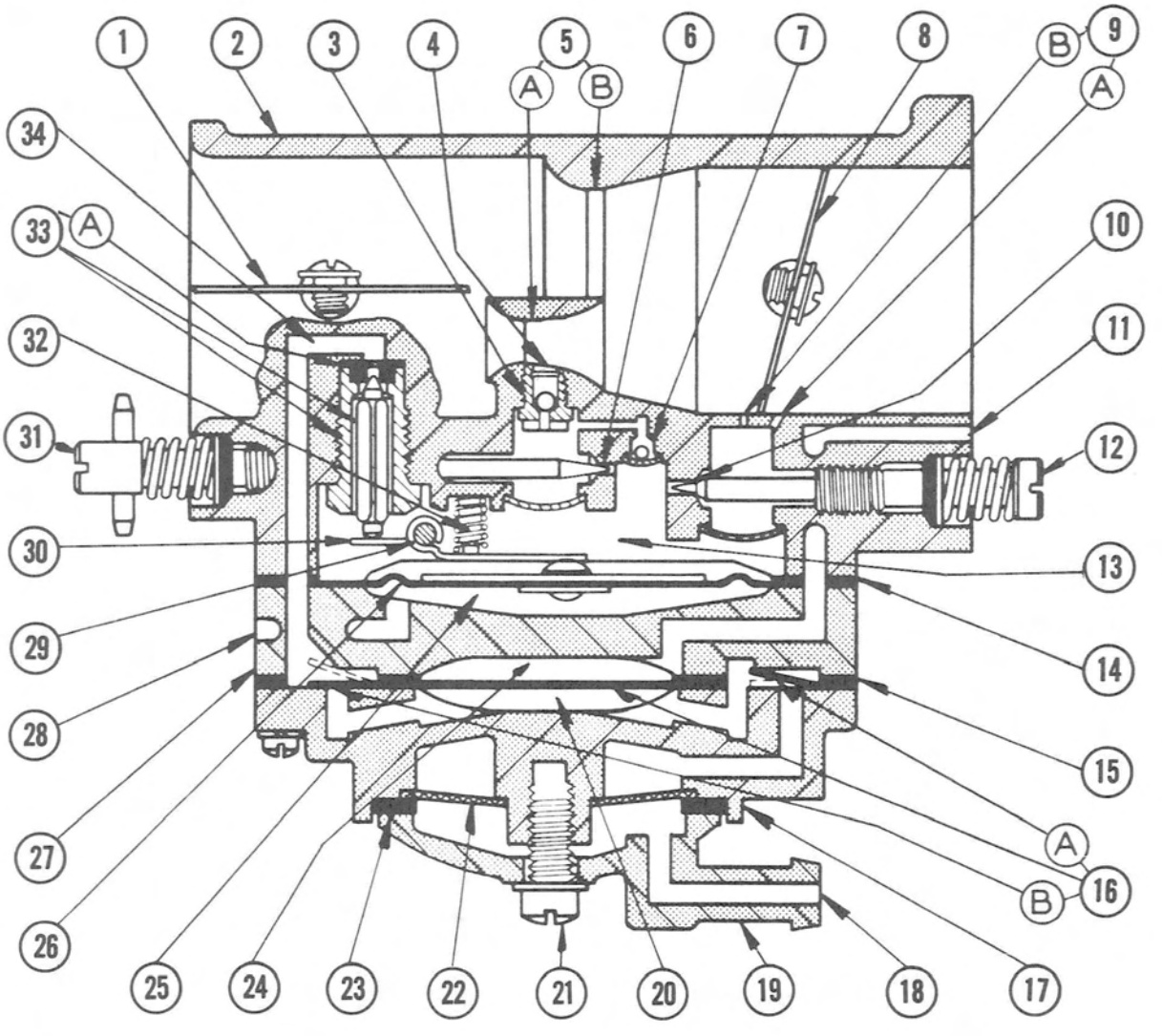

Figure 1. Carburetor - Models 200, Rocket, Lightning

1 - Choke Shutter
2 - Body
3 - Main Fuel Check Valve
4 - Main Fuel Discharge Port
5A - Primary Venturi
5B - Secondary Venturi
6 - High Speed Mixture Orifice
7 - Power Valve
8 - Throttle Shutter
9A - Primary Idle Discharge Port
9B - Secondary Idle Discharge Port
10 - Idle Mixture Orifice
11 - Impulse Port
12 - Idle Mixture Screw
13 - Metering Chamber
14 - Diaphragm Gasket
15 - Fuel Pump Gasket
16 - Fuel Pump Diaghragm
16A - Pump Diaphragm Inlet Valve
16B - Pump Diaphragm Outlet Valve
17 - Fuel Pump Cover
18 - Fuel Inlet
19 - Strainer Cover
20 - Fuel Pump Chamber
21 - Strainer Cover Retaining Screw
22 - Fuel Strainer Screen
23 - Strainer Cover Gasket
24 - Pulse Chamber
25 - Atmospheric Chamber
26 - Metering Diaphragm
27 - Diaphragm Cover
28 - Atmospheric Vent
29 - Fulcrum Pin
30 - Inlet Control Lever
31 - High Speed Mixture Screw
32 - Inlet Tension Spring
33 - Inlet Needle & Seat
33A - Inlet Seat Gasket
34 - Fuel Inlet Supply Channel

IDLE ADJUSTMENT

1. Adjust idle mixture screw to obtain a smooth, steady idle, and readjust idle speed screw to obtain idle speed shown in "Specifications" Section 8. Recheck idle mixture adjustment at recommended idle speed.
2. An over-rich idle mixture will cause engine to fire unevenly and discharge smoke from exhaust. A lean idle mixture usually will cause backfiring.

HIGH SPEED ADJUSTMENT

1. Operate vehicle at full throttle under normal load conditions and slowly turn high speed mixture screw outward (counterclockwise) until engine starts to fire unevenly or "four-cycles", which indicates an over-rich fuel mixture.
2. At this point, slowly turn high speed mixture screw inward (clockwise) until engine fires evenly (smooths-out).

IMPORTANT: DO NOT adjust carburetor leaner than necessary to attain reasonably smooth operation. IT IS PREFERABLE to operate with mixture SLIGHTLY RICH rather than too lean. Under normal operation conditions at sea level, final setting of high speed mixture screw MUST NOT BE less than a three-quarter (¾) turn from seat.

The above procedure need not be repeated each time the engine is started. The adjustments will remain in position and will not require frequent readjustment.

NOTE: If carburetor adjustments are correct, and leanout symptoms persist, inspect the pulse line from carburetor to crankcase for kinks or twists which could collapse the line, thus reducing fuel flow to the engine.

Snowmobiles below VEHICLE Serial No. 2808903 are equipped with a clear, plastic pulse line. Vehicles above this serial number have a rubber pulse line. If the clear, plastic pulse line is suspected of causing a leanout condition, replace the line with rubber pulse line (C-32-58328) and two (2) clamps (C-54-55206). Make certain that the pulse line is not twisted or kinked during installation.

REMOVAL

1. Close fuel shut-off at tank.
2. Loosen choke cable and remove dash assembly (if necessary).
3. Remove throttle cable, fuel and pulse lines.
4. Remove 2 attaching nuts and pull carburetor off studs.

DISASSEMBLY and CLEANING

1. Inspect idle speed screw, washer and tension spring. Inspect casting for thread damage. If casting is stripped of threads, repair by inserting an 8-32 Heli-Coil 3/16" long.
2. Fuel inlet and filter cover are removed by removing center screw. Remove filter cover, cover gasket and filter screen. Filter screen should be cleaned by flushing with fuel or solvent and blowing with compressed air. It is advisable to replace the gasket whenever the filter screen is serviced. Flush all dirt from the plastic cover before assembly.
3. Remove the 6 body screws and fuel pump cover casting. Remove fuel pump diaphragm and gasket. Inspect pump diaphragm (it must be flat and free from holes). Replace gasket if there are holes or creases on its sealing surface. Be certain to reassemble these parts in correct order. Assemble pump gasket onto diaphragm cover first, then assemble fuel pump diaphragm next to gasket and flap valve member next to fuel pump diaphragm so that flap valves will seat against fuel pump cover.
4. Remove diaphragm cover casting, metering diaphragm and diaphragm gasket. Inspect diaphragm for holes, tears and imperfections. These parts must be reassembled in correct order. Diaphragm gasket is assembled onto body casting first, and metering diaphragm is assembled next to gasket.
5. Remove fulcrum pin retaining screw, fulcrum pin inlet control lever and inlet tension spring. Use caution in removing these parts, because spring pressure may cause inlet lever to fly out of casting. Inspect parts for wear or damage. Inlet control lever must rotate freely on fulcrum pin.
6. Handle the inlet spring carefully. Do not stretch this spring or in any way change its compression characteristics. If in doubt about its condition, replace the inlet spring.
7. Remove inlet needle. Remove inlet seat assembly with 5/16" thin wall socket wrench. Remove inlet seat gasket. Inlet seat assembly consists of a brass cage and a rubber insert for inlet needle seat. Insert goes into cage only one correct way. Looking at the insert, one side is flat and smooth; other side has a ridge or rim molded around outside edge. Assemble ridge away from inlet needle point. Some models of HR carburetor are equipped with a rubber tipped needle, a brass inlet seat and a copper gasket. The installation instructions, following, are applicable to both types of inlet seats.
   Inlet and seats are matched and tested for leaks at the factory and parts should not be interchanged. They must be kept in matched sets. When installing insert cage into carburetor body, use a new gasket. Do not force the cage, to prevent stripping threads or distorting insert. Use a torque wrench to apply 25 to 30 in. lbs. pressure. Needle and seat assembly must be clean to ensure correct performance.
8. Remove and inspect the points of both high speed and idle mixture screws. (Figure 2) Notice that idle mixture screw point has step design to minimize point and casting damage. Through misuse, either mixture screw point may be bent, extruded from being forced into the casting seat or possibly broken off in the casting. If either mixture screw is damaged, be sure to inspect condition of the casting. If adjustment seats are damaged, a new body casting is required.
9. Idle bypass ports and main nozzle ball check valve are sealed from metering chamber by welch plugs. It is seldom necessary to remove either of these plugs, because wear does not exist in either section, and any dirt, that may accumulate, usually can be blown out with compressed air through mixture screw holes. If carburetor is unusually

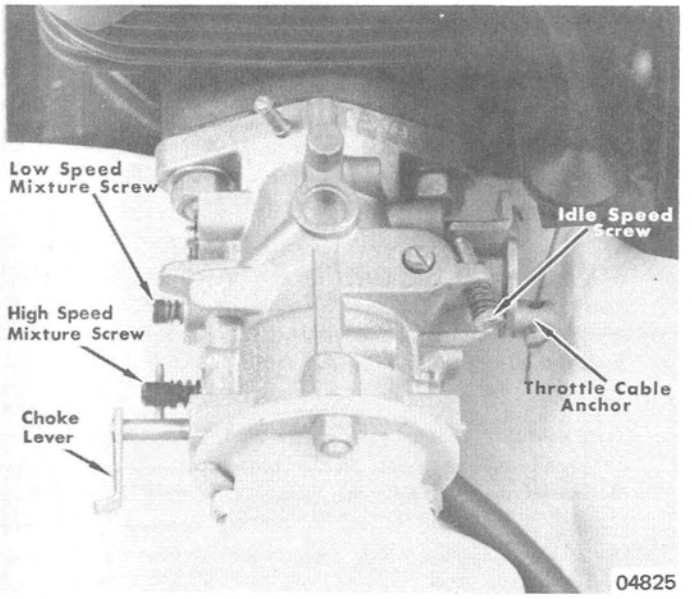

Figure 2. Carburetor - Models 200, Rocket, Lightning

dirty and welch plugs must be removed, it will require careful work. Drill through the welch plug with 1/8" drill. Allow drill to just break through the welch plug. If drill travels too deep into cavity, the casing may be ruined. Pry welch plug out of its seat with a small punch. Inspect idle bypass holes to ensure that they are not plugged. Do not push drills or wires into metering holes; this may alter carburetor performance. Blow plugged holes clean with compressed air. Remove main nozzle ball check assembly with a screwdriver of correct blade width. If ball check is defective, engine will not idle unless high speed mixture screw is shut off, or there will be poor high speed performance with the high speed mixture screw adjusted at 1¼ turns open. Replace defective part.

10. Choke and throttle shafts may be removed if there is evidence of wear on these parts. Shafts need not be removed before cleaning body casting, if parts are not worn. Mark throttle and choke shutters before removing, so that they can be reassembled correctly. Edges are tapered for exact fit into carburetor bores. Remove 2 throttle shaft clips and pull shaft out of casting. Examine shaft and body bearings for wear. If shaft shows excessive wear, replace it. If body bearing areas are worn, replace body casting. Remove choke shaft from body carefully so that friction ball and spring will not fly out of casting. Inspect shaft and bushings.
11. Clean all parts before reassembling carburetor. Clean metal parts in a good grade commercial solvent. If carburetor is not very dirty, clean by blowing parts with compressed air and carefully blowing out each channel and orifice in casting.

REASSEMBLY

1. Assemble carburetor. Make certain that all parts are kept clean before they are assembled to body casting. Few measurements are required to complete the assembly of this unit.
2. Tighten inlet seat to 25-30 in. lbs. torque.
3. Adjust inlet control lever so that center of lever, that contacts the metering diaphragm, is flush with metering chamber wall, as shown in the Figures 3 and 4 drawings.

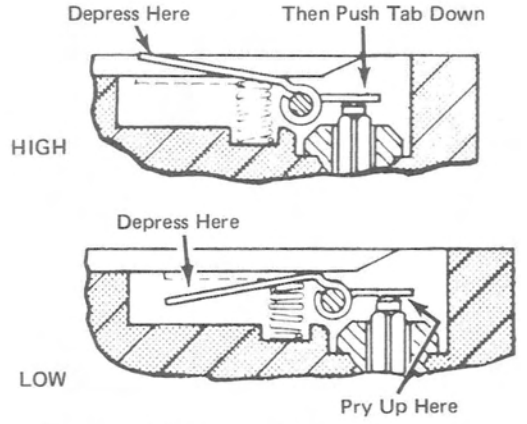

Figure 3. Inlet Control Lever Adjustment

4. Install new welch plugs at nozzle well and bypass chamber, if original parts were damaged or removed. Place new welch plug into casting counter bore convex side up and flatten it to a tight fit with a 5/16" flat end punch. If installed welch plug is concave, it may be loose and cause an uncontrolled fuel leak. Correctly installed welch plug is flat.
5. Assemble gaskets, diaphragms and castings in correct order.
6. Assemble throttle shaft into carburetor body and attach throttle shaft clip before assembling throttle shutter. With shaft secured in place, assemble shutter into shaft. Make certain that shutter fits accurately into throttle bore in closed position.
7. Assemble spring and ball into choke shaft hole and assemble shaft into position. Assemble shutter into choke shaft.

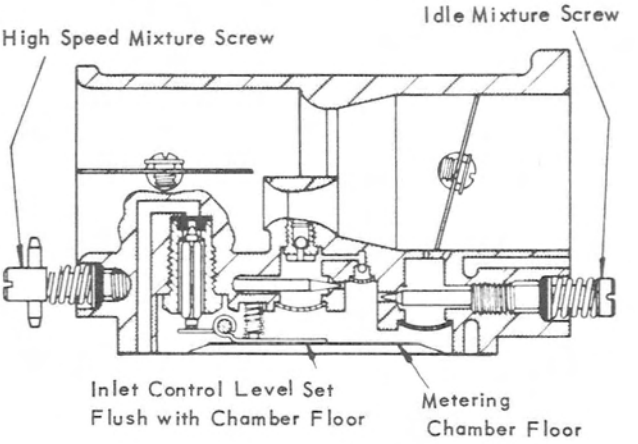

Figure 4. Inlet Control Lever Adjustment

INSTALLATION

1. Clean gasket surfaces.
2. Install carburetor and secure with attaching nuts.
3. Connect throttle cable, fuel and pulse lines.
4. Install dash and connect choke cable.
5. Open fuel shut-off valve at tank.

"OM" CARBURETOR

MODELS HURRICANE (644cc) and MARK I (644cc)

TROUBLE CHART

Trouble	Possible Cause	Remedy
Carburetor Floods	Dirt or foreign particles preventing inlet needle from seating. Worn inlet needle Incorrect float setting	Flush out inlet seat and clean inlet needle. Remove and replace with a new inlet needle and seat assembly Reset float to correct level.
Engine Will Not Idle	Idle by-pass tube plugged. Idle channels plugged. Idle by-pass holes plugged. Incorrect idle setting Fuel line pinched. Perfect seal from gas tank fitting in fuel line	Blow out with compressed air. Blow out with compressed air. Blow out with compressed air. Re-adjust. Relocate fuel line. Clean out line
Engine Will Not Accelerate	Float level is low. Incorrect idle speed adjustment Restricted fuel flow to carburetor Main nozzle is damaged. Main nozzle is plugged. Accelerating pump check valves dirty	Reset float to correct level. Re-adjust Check fuel lines and filters for restricted flow. Remove and replace. Blow out with compressed air. Clean or replace.
Engine Runs Lean	Float set too low. Restricted fuel flow to the carburetor Main orifice plugged. Main nozzle damaged.	Reset float to correct level. Check fuel lines to the carburetor to see that a full fuel flow is maintained. Check fuel filters for restricted flow. Blow out with compressed air. Remove and replace.
Engine Runs Rich	Float set too high. Idle air bleed plugged Carburetor floods. Nozzle air bleed plugged or damaged.	Reset float to proper level. Blow out with compressed air. See above. Clean or replace.

NOTE: In making carburetor adjustments, turn adjustments carefully and gently - do not force adjustments into seats.

NOTE: On Hurricane (644cc) Model, if vapor lock occurs, install Anti-Vapor Lock Kit.

GENERAL

The "OM" carburetor is a concentric, float-type carburetor. The choke shutter is the relieving-type for semi-automatic operation.

ADJUSTMENTS

STARTING ADJUSTMENT

The starting adjustment opening for a new carburetor, or for one that has not been run on the engine, is one full turn open on idle mixture screws. (Figure 1) The idle speed screw should be adjusted to open the throttle shutter a small amount.

IDLE ADJUSTMENT

Adjust the idle mixture screw (Figure 1) to obtain a smooth, steady idle and re-adjust the idle speed screw to obtain the idle speed shown in "Specifications" Section 8. Recheck the idle mixture adjustment at the recommended idle speed. An over-rich mixture will cause the engine to fire unevenly, and smoke will discharge from the exhaust. A lean idle mixture may cause backfiring.

HIGH SPEED JET

Hurricane (644cc) and Mark I (644cc) carburetors are equipped with a fixed high speed jet. (Figure 1)

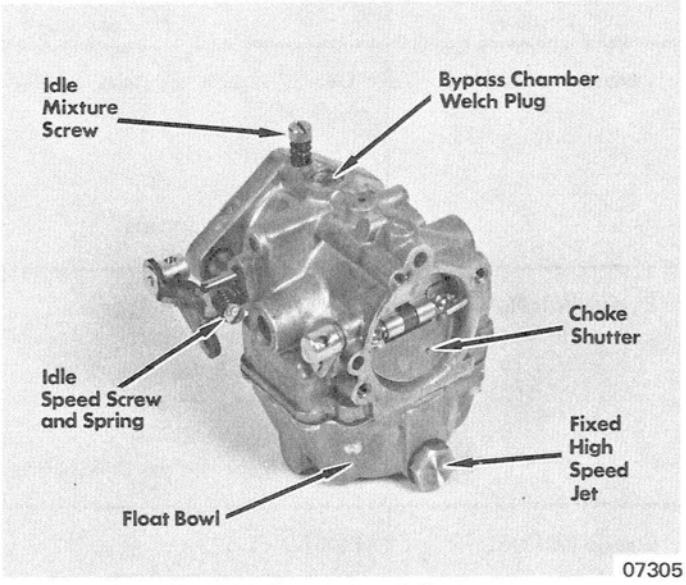

Figure 1. Carburetor Adjustments

REMOVAL

1. Remove carburetor inlet bulkhead (if so equipped).
2. Loosen hose clamp and remove air intake assembly. (Figure 2)

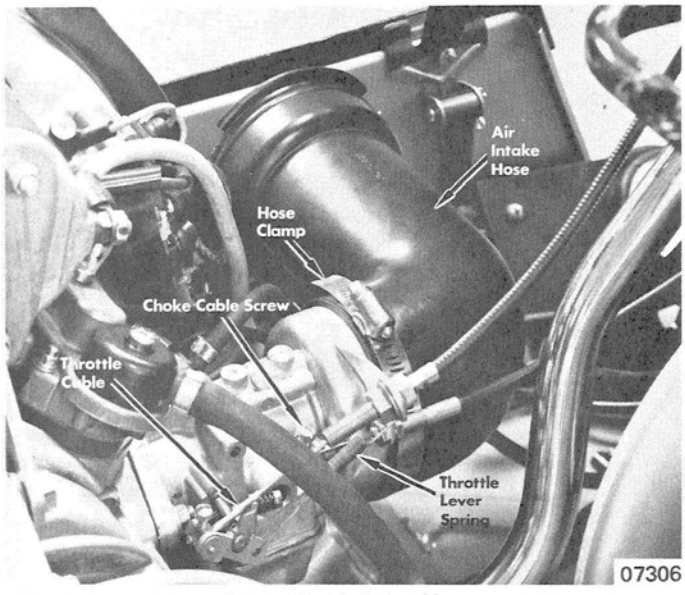

Figure 2. Air Inlet Hose

3. Remove throttle lever spring from throttle lever.
4. Loosen throttle cable and choke cable from carburetor linkage. (Figure 2)
5. Remove 2 nuts and remove air intake and throttle bracket. (Figure 3)

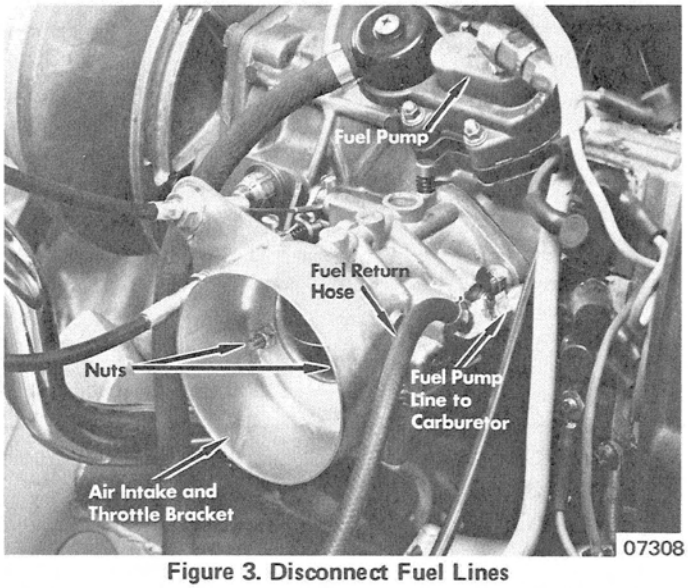

Figure 3. Disconnect Fuel Lines

6. Disconnect carburetor to fuel pump line at fuel pump, then disconnect from carburetor. (Figure 3)
7. Remove fuel return hose from carburetor elbow. (Fig. 3)

NOTE: It will be necessary to use a new hose clamp when installing fuel return hose to elbow.

8. Remove 2 carburetor to manifold nuts and remove carburetor.

DISASSEMBLY and CLEANING

CAUTION: Some solvents and cleaners have a damaging effect on the synthetic rubber parts and gaskets used in carburetors. It is best to use a petroleum product for cleaning. DO NOT use alcohol, lacquer thinner, acetone, benzol or any solvent with a blend of these ingredients, unless the rubber parts and gaskets have been removed. The entire carburetor should be cleaned by flushing with fuel and blown dry with compressed air before disassembly. The carburetor assembly should be inspected for cracks in the castings, bent or broken shafts, loose levers or swivels and stripped threads.

1. Remove idle speed screw and tension spring. (Figure 1) Inspect the screw for damaged threads.
2. Remove idle mixture screw and spring. (Figure 4) Examine taper point and threads for damage.
3. Remove fixed jet plug (Figure 1) and gasket and remove jet from plug.

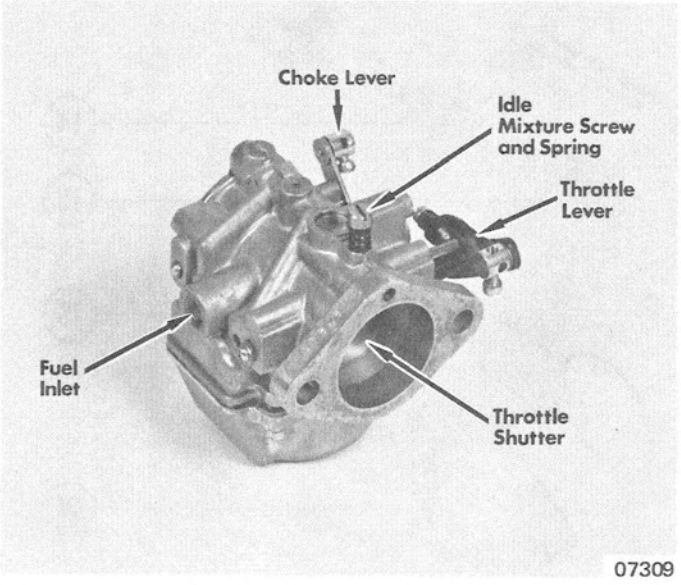

Figure 4. Carburetor, Left Side

4. Remove float bowl retaining screws and remove float bowl (Figure 1) by tapping lightly to break the gasket seal.
5. Remove float fulcrum pin, float, inlet needle and seat and gasket. (Figure 5) The brass cage has a rubber insert for the inlet needle seat. The insert enters the brass cage only one correct way. Looking at the insert, one side is flat and smooth, the other side has a ridge or rim molded around to the outside edge. This ridge is assembled away from the inlet needle point.
   Inlet needle and seat (Figure 6) is matched and tested for leaks, and parts should not be interchanged (must be kept in matched sets). DO NOT force cage, as this may strip threads or distort the rubber insert. Use a torque wrench to apply 40 to 50 in. lbs. torque. The needle and seat assembly must be clean to ensure correct performance.

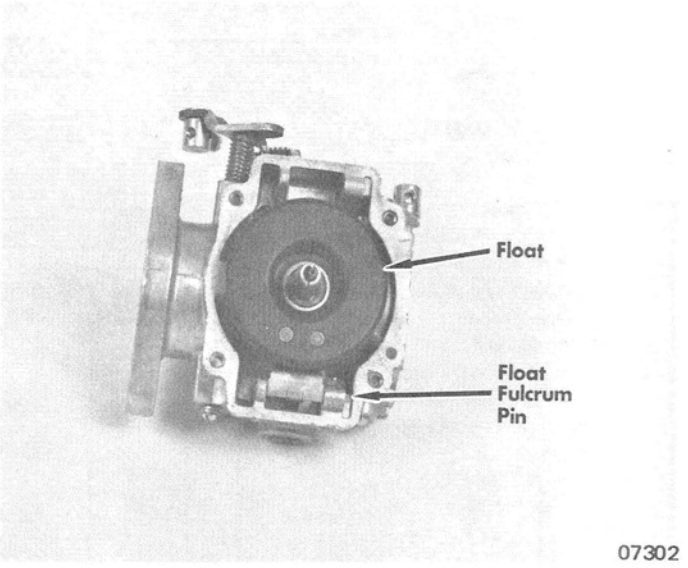

Figure 5. Float Fulcrum Pin

6. It is not necessary to disassemble the carburetor beyond this point for cleaning. Examine throttle and choke shafts for wear and determine whether or not replacement is necessary. Inspect choke and throttle shutter plates for damage. Notice that edges of throttle and choke shutter plates are tapered for exact fit into carburetor bores. Mark shutters before removing, so that direction of taper will be correct in reassembly of these parts.
7. If carburetor is unusually dirty, it may be necessary to remove the bypass chamber welch plug (Figure 4) which covers the primary and secondary idle discharge parts. CAREFULLY drill through welch plug with 1/8" drill. Allow drill to just break through the welch plug. If drill travels too deep into the cavity, the casting or discharge ports may be damaged. Inspect discharge ports to ensure that they are not plugged. DO NOT push drills or wires into these metering holes, as it may alter carburetor performance. Blow holes clean with compressed air.

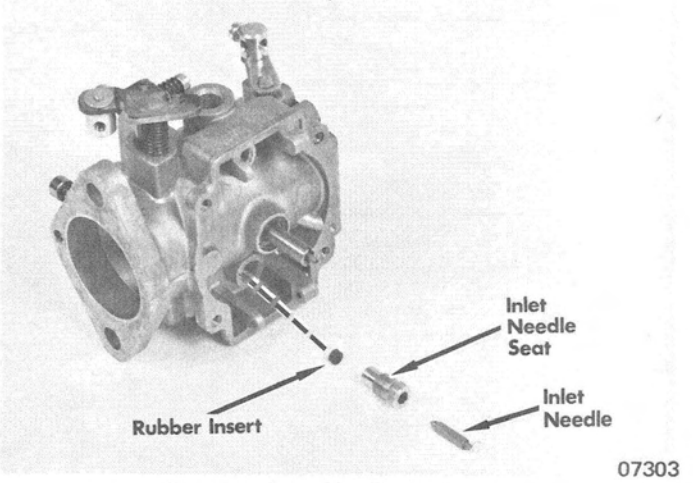

Figure 6. Inlet Needle Assembly

1 - Carburetor Assembly
2 - Choke Shutter
3 - Screw
4 - Choke Spring
5 - Choke Valve
6 - Friction Spring
7 - Choke Ball
8 - Cup Plug
9 - Welch Plug
10 - Idle Mixture Screw
11 - Idle Mixture Screw Spring
12 - Choke Shaft and Lever
13 - Screw
14 - Throttle Shaft and Lever
15 - Throttle Shaft Return Spring
16 - Idle Speed Screw
17 - Idle Speed Screw Spring
18 - Screw
19 - Throttle Shutter
20 - Screw
21 - Carburetor Flange Gasket
22 - Screw
23 - Lockwasher
24 - Washer
25 - Inlet Needle and Seat
26 - Gasket
27 - Main Nozzle
28 - Fuel Bowl Gasket
29 - Float
30 - Pin
31 - Gasket
32 - Fuel Bowl
33 - Plug
34 - Gasket
35 - Main Fuel Jet
36 - Screw

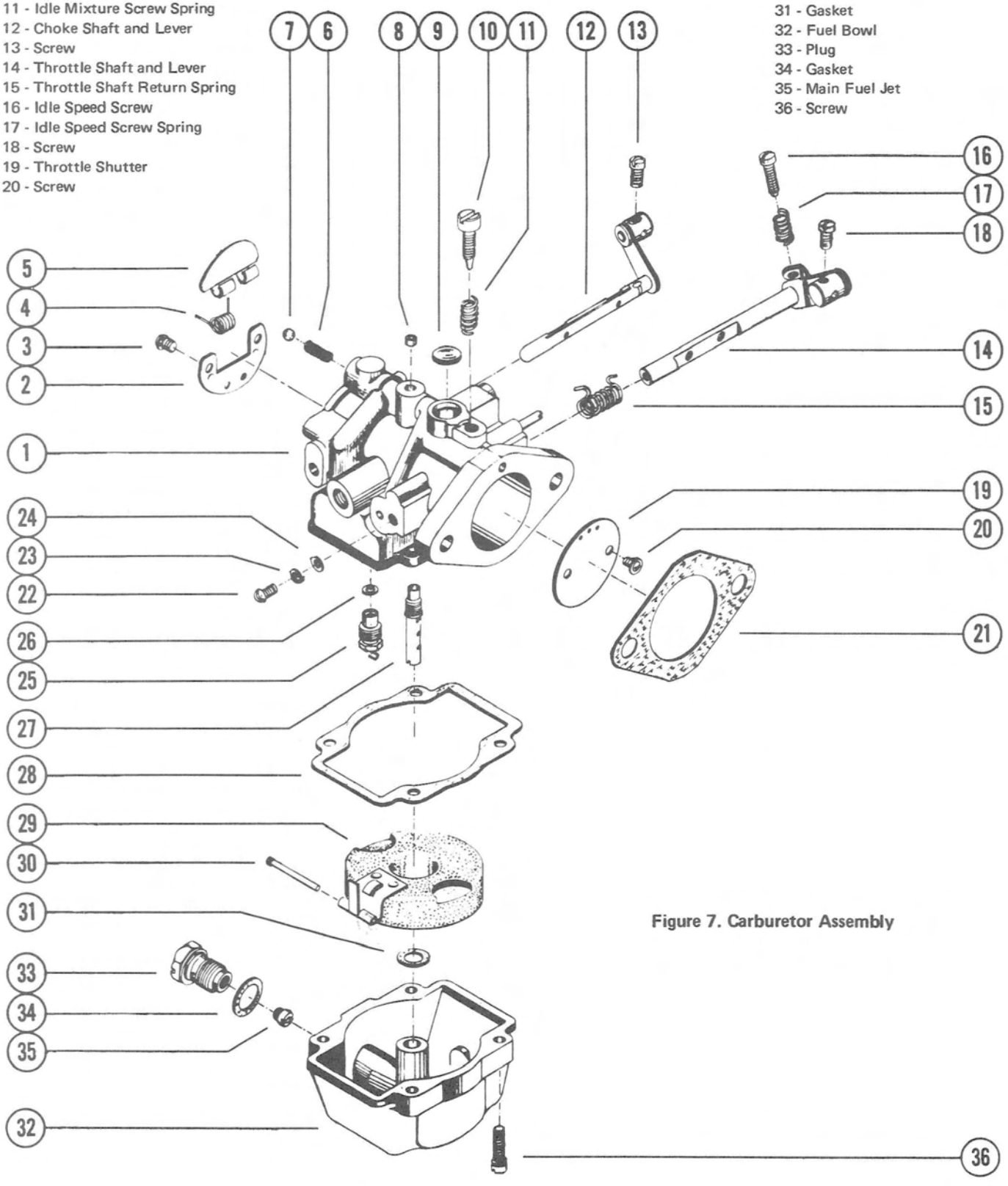

Figure 7. Carburetor Assembly

REASSEMBLY

1. Clean all parts before reassembling carburetor. Use a good grade commercial carburetor solvent. After cleaning, blow out all passages and orifices with clean compressed air. Replace all worn parts.

2. Refer to (Figure 7) and reassemble carburetor. Make certain that all parts are kept clean during assembly into the casting. Tighten inlet seat to 40-50 in. lbs.

FLOAT LEVEL and DROP ADJUSTMENT

1. Adjust float level by bending inlet needle contact tang. Correct float level measurement is 13/32 ± 1/32" from body casting surface to bottom of float when body assembly is held upside down. (Figure 8)

2. After adjusting float level, adjust float drop to 13/16 ± 1/32". (Figure 9)

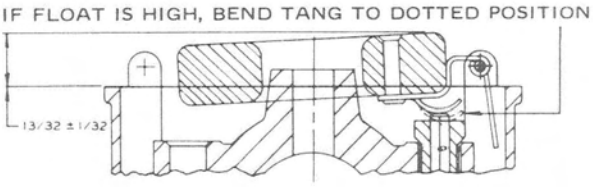

Figure 8. Float Level Adjustment

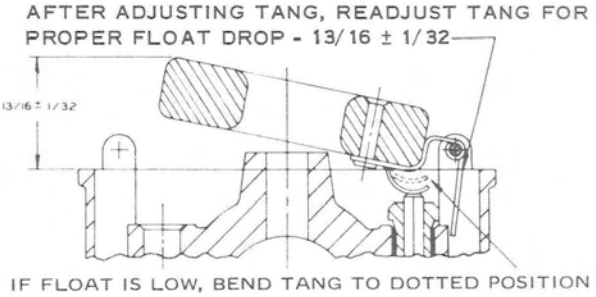

Figure 9. Float Drop Adjustment

INSTALLATION

1. Clean gasket surfaces.
2. Install carburetor and secure with attaching nuts.
3. Connect carburetor to fuel pump line and fuel return hose to carburetor elbow.
4. Install air intake and throttle bracket with 2 nuts.
5. Install throttle cable and choke cable and install throttle lever spring to throttle lever.
6. Connect air intake assembly to carburetor with hose clamp.
7. Install carburetor inlet bulkhead (if so equipped).

"HD" CARBURETOR
MODELS 440 MAX (Chassis Serial No. 3447382 and Below) and MARK II (Chassis Serial No. 3591478 and Below)
TROUBLE CHART

Trouble	Possible Cause	Remedy
Carburetor Floods	Dirt in inlet needle and seat assembly Inlet seat gasket missing or damaged Inlet control lever incorrectly adjusted Diaphragm incorrectly installed. Inlet control lever pin loose or not correctly installed Inlet control lever tight on fulcrum pin Inlet needle or seat damaged or worn	Remove and clean or replace. Replace gasket. Readjust lever flush with metering chamber wall. Replace or correct installation. Tighten retaining screw and correct installation. Replace damaged part or clean dirt from these parts. Replace the assembly.
Engine Will Not Idle	Adjustment set too lean Dirt in idle fuel channels Channel plugs missing or not tightly sealed Main fuel discharge check valve not sealing Inlet control lever set too far away from diaphragm Carburetor flooding Idle adjustment screw point damaged Idle air bleed plugged Idle adjustment hole damaged, forced, oversize or casting cracked near the adjustment point	Readjust. Blow out with compressed air. Re-seat or replace channel plugs. Blow out with compressed air or replace. Re-set control lever flush with metering chamber wall. See above. Replace the adjustment screw. Blow out with compressed air. Replace carburetor.
Engine Will Not Accelerate	Idle adjustment set too lean Dirt in main nozzle system Main fuel discharge check valve damaged Main fuel discharge check valve not seated correctly in body casting Inlet control lever incorrectly set	Readjust. Blow out channels with compressed air. Replace. Re-seat the assembly flush with nozzle well surface. Readjust inlet control lever flush with metering chamber wall.
Engine Runs Lean	Filter screens plugged or dirty Inlet control lever incorrectly adjusted Diaphragm cover plates loose Air leaks into the metering system Inlet tension spring stretched or damaged Fuel pump not operating Carburetor loose on manifold Air leak in fuel lines Fuel line plugged or pinched Low fuel supply Pump pulse channel plugged or not aligned to engine Fuel tank vent not operating.	Clean or replace. Readjust lever flush with wall of metering chamber. Tighten screws. All channel plugs, plug screws and lead plugs to be tightly sealed. Replace spring. Clean fuel pump and replace worn parts or check assembly to be certain that gaskets and diaphragms are correctly installed. Tighten in place. Replace fuel line. Clean or find restriction of fuel line. Fill fuel tank. Clean or correct alignment. Repair vent.
Engine Runs Rich	Ruptured pump diaphragm Carburetor flooding Welch plugs not sealing Inlet control lever incorrectly set Plugged air filter or intake Fuel return line plugged or pinched	Replace diaphragm. See above. Re-seat or replace. Readjust lever flush with wall of metering chamber. Clean or replace. Clean or find restriction of fuel return line.

GENERAL

Models 440 MAX (438cc) and Mark II (644cc) Mercury Snowmobiles use a Tillotson HD series carburetor. This carburetor is a complete fuel system consisting of a carburetor, integral fuel pump and fuel filter. The diaphragm controlled metering system allows precise fuel metering to engine at extreme tilt angles and prevents fuel level changes due to vibration.

ADJUSTMENTS

GENERAL

The idle mixture screw has right hand screw threads. Turn clockwise to close (lean the mixture) and counterclockwise to open (enrich the mixture.) An over-rich idle mixture will cause the engine to fire unevenly and smoke from the exhaust. A lean idle mixture usually will cause backfiring.

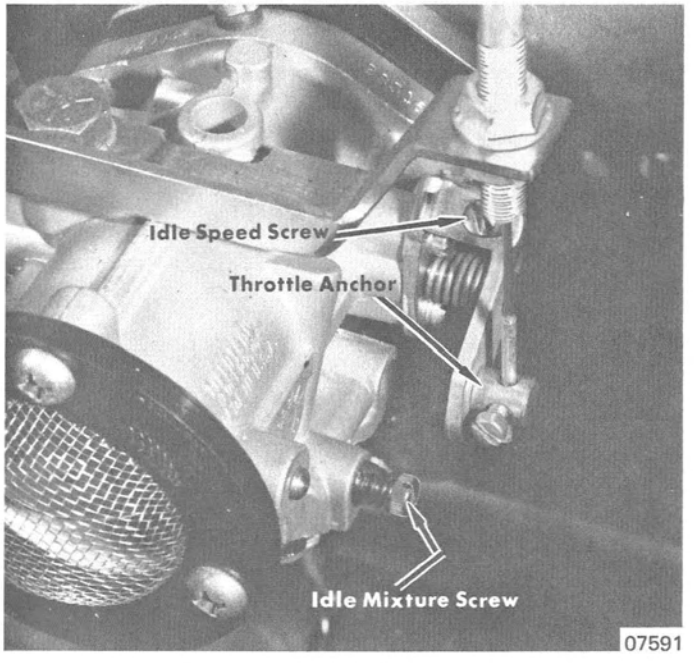

Figure 1. 440 MAX Carburetor

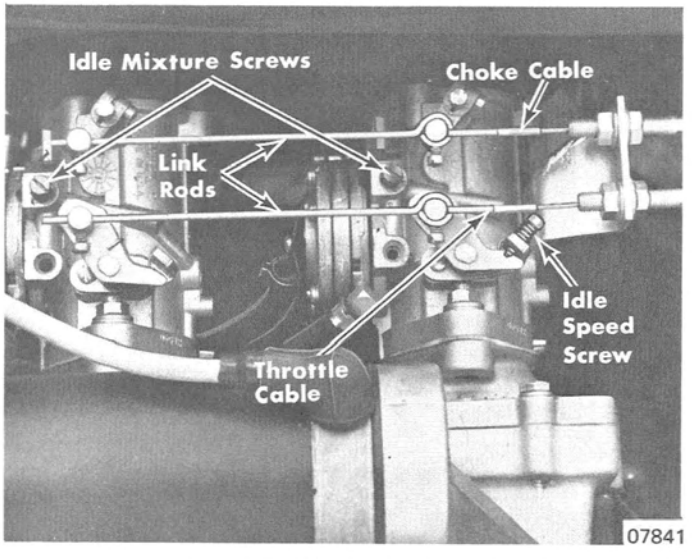

Figure 2. Mark II Carburetor

MARK II CARBURETOR SYNCHRONIZATION

1. Loosen choke and throttle cable anchor screws on both carburetors.
2. Back off idle speed screw (Figure 2) so that it will not affect carburetors.
3. With choke and throttle cables thru cable anchors, pull choke and throttle link rods to remove all slack.
4. Tighten link rod anchor screws on right carburetor (left carburetor in Figure 2).
5. Tighten choke and throttle cable anchor screws on left carburetor (right carburetor in Figure 2).
6. Refer to "Starting Adjustment" and "Idle Adjustment", following, and set idle speed.

STARTING ADJUSTMENT

1. Initial adjustment for a new unit (or a carburetor that has not been run on engine) is one full turn open on idle mixture screw. (Figure 1 or 2)
2. Idle speed screw (Figure 1 or 2) should be adjusted to open throttle shutter a small amount.

WARNING: Adjust idle speed carefully, since very high idle speed may cause drive sheave to engage, and snowmobile may start to move.

3. Refer to "Starting Procedure", Section 1, and start engine. Open choke shutter enough to allow engine to idle until warmed-up so that it runs continuously with choke fully open. DO NOT race a cold engine.

IDLE ADJUSTMENT

1. Start engine and thoroughly warm before attempting adjustment.
2. Set idle speed adjustment screw to attain recommended idle RPM (refer to "Specifications" Section 8). Turn idle speed adjustment screw to right (clockwise) to increase RPM or to left (counterclockwise) to decrease RPM.
3. With engine running at idle speed, turn idle mixture screw counterclockwise until engine starts to "load-up" or fire unevenly, due to over-rich mixture. (Figure 1 or 2)

   NOTE: When adjusting carburetors on Mark II, adjust one (1) carburetor at a time.

4. Slowly turn mixture screw clockwise until engine picks up speed and fires evenly. Turn needle 1/8-turn at a time, then wait sufficient time for engine to respond to this adjustment.

> **CAUTION: DO NOT adjust carburetor leaner than necessary to attain reasonably smooth operation. IT IS PREFERABLE to operate with mixture SLIGHTLY RICH rather than too lean.**

5. Recheck idle RPM and readjust if necessary.
   NOTE: If idle RPM is readjusted, recheck idle mixture adjustment at recommended idle speed.
6. Stop engine.

HIGH SPEED ADJUSTMENT

1. High speed adjustment is not required. Mark II (644cc) and 440 MAX (438cc) carburetors are equipped with fixed high speed jets. Refer to "Specifications" Section 8 for carburetor jet sizes and specifications.
2. Sprocket options are available as optional equipment for high elevation operation or operation under various load conditions. Refer to "Chassis" Section 2, Part D, for proper application.

REMOVAL

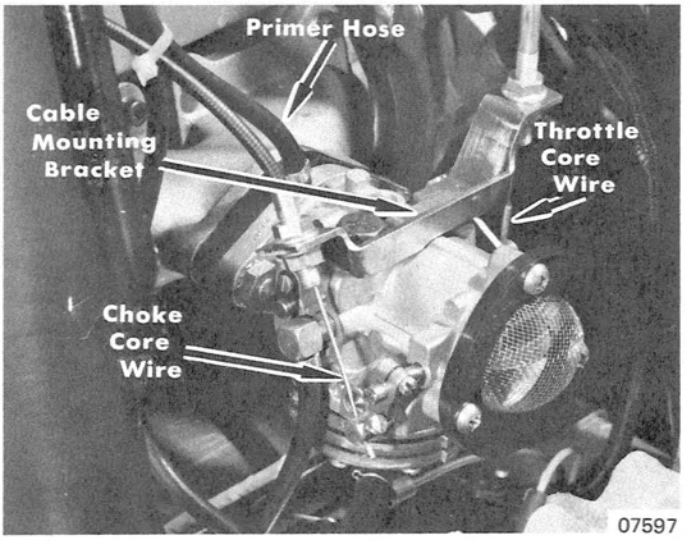

Figure 3. Carburetor Removal

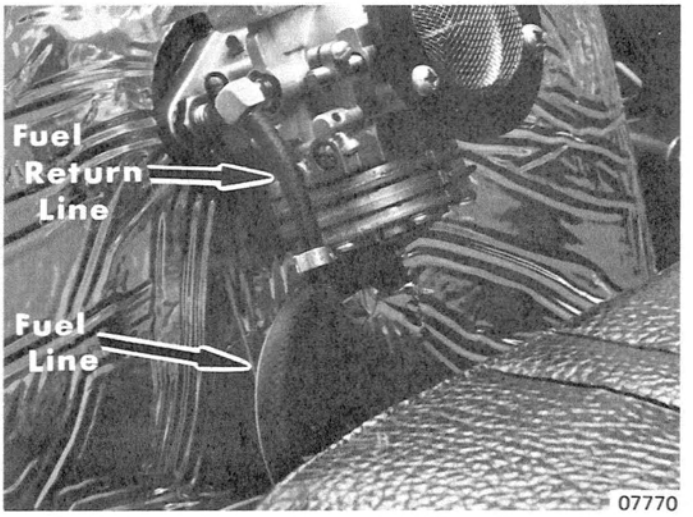

Figure 4. Carburetor Hose Removal

440 MAX MODEL

1. Remove 2 screws and open dashboard cover.
2. Disconnect throttle and choke core wires from carburetor. (Figure 3)
3. Remove operating cable mounting bracket (Figure 3) from carburetor and move assembly to side.
4. Unhook throttle return spring from carburetor.
5. Disconnect primer hose from carburetor. (Figure 3)
6. Disconnect fuel line, fuel return line (Figure 4) and pulse hose (Figure 5) from carburetor.
7. Remove carburetor from intake manifold.

MARK II MODEL

1. Open top cowl.
2. Remove engine from chassis. (Refer to "Engine Mechanical" Section 5, Part D.)
3. Remove carburetor air baffle from carburetors.
4. Remove carburetor(s) from intake manifold.

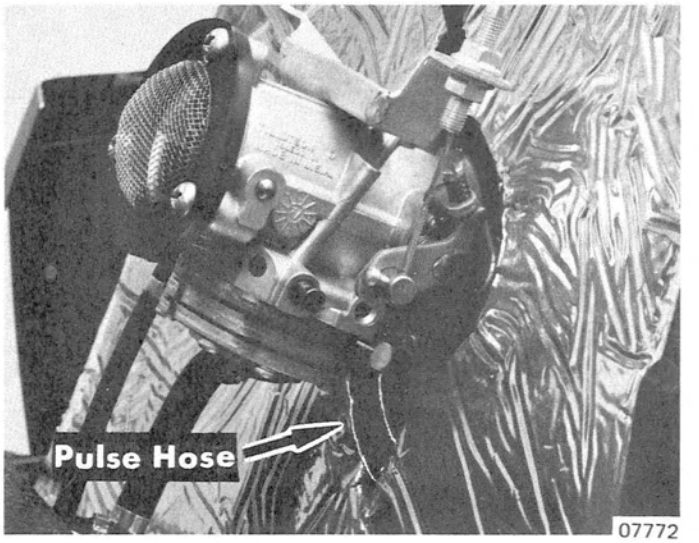

Figure 5. Carburetor Hose Removal

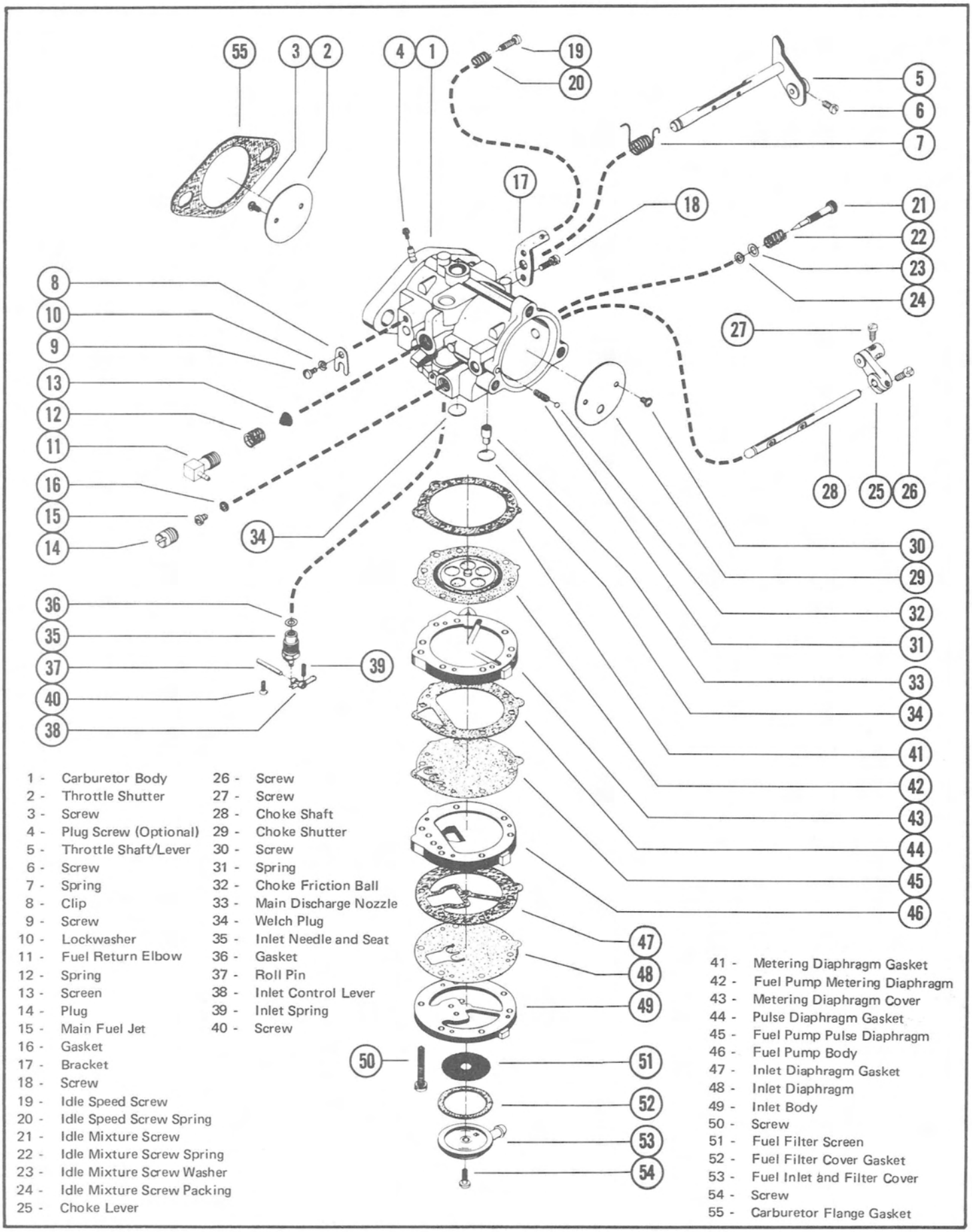

Figure 6. Carburetor Assembly

DISASSEMBLY and CLEANING

CAUTION: Some solvents and cleaners have a damaging effect on synthetic rubber parts used in carburetors. Use a petroleum product for cleaning. DO NOT use alcohol, lacquer acetone thinner, benzol or any other solvent with a blend of these ingredients, unless rubber parts and gaskets are removed. Entire carburetor should be cleaned by flushing with fuel and blown dry with compressed air before disassembly. Carburetor should be inspected for cracks in the casting, bent or broken shafts, loose levers or swivels and stripped threads.

1. Remove idle speed screw and tension spring. (Figure 1 or 2) Inspect for damaged threads.
2. Remove idle mixture screw (Figure 1 or 2), tension spring, washer and "O" ring. Inspect taper point, threads and "O" ring for damage. If mixture screw is damaged, inspect condition of casting.
3. Remove fixed jet plug (Figure 4), fixed jet and washer.
4. Fuel inlet and filter cover are removed by removing center screw. Remove filter cover, cover gasket and filter screen. Clean filter screen by flushing with fuel or solvent and blowing with compressed air. Flush all dirt from plastic cover before assembly.

   NOTE: Replace cover gasket whenever servicing filter screen.

5. Remove 6 inlet body to carburetor attaching screws.
6. Remove inlet body casting, inlet diaphragm and gasket. Inspect casting for nicks, dents or cracks. Inspect diaphragm; it must be flat and free of holes. Replace gasket if holes or creases exist on sealing surface.
7. Remove fuel pump casting, pump diaphragm (pulse) and gasket. Inspect casting for nicks, dents or cracks. Inspect diaphragm; it must be flat and free of holes. Replace gasket if holes or creases on sealing surface are present.
8. Remove metering diaphragm cover casting, pump diaphragm (metering) and gasket. Inspect casting for nicks, dents or cracks. Inspect metering diaphragm; center plate must be riveted securely to diaphragm and diaphragm must be free of holes and imperfections. Replace gasket if holes or creases exist on its sealing surface.

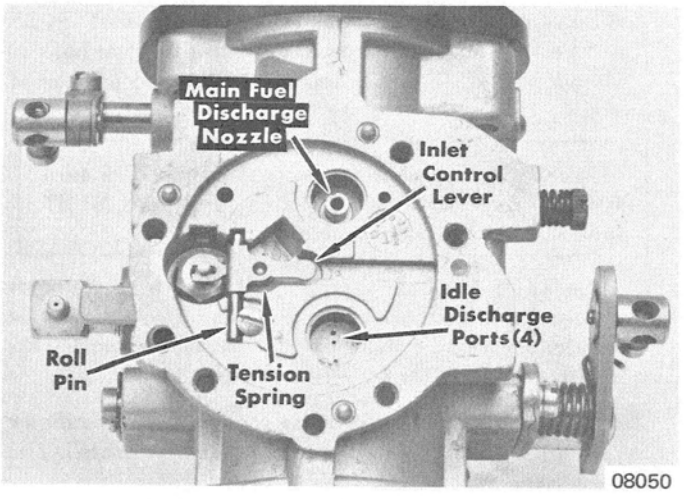

Figure 7. Inlet Needle Assembly

9. Remove roll pin retaining screw, roll pin, inlet control lever and the inlet tension spring. Inspect parts for wear. Inlet control lever MUST rotate freely on roll pin. (Figure 7)

CAUTION: Handle inlet spring carefully. DO NOT stretch spring or, in any way, change its compression characteristics. If in doubt about its condition, replace spring.

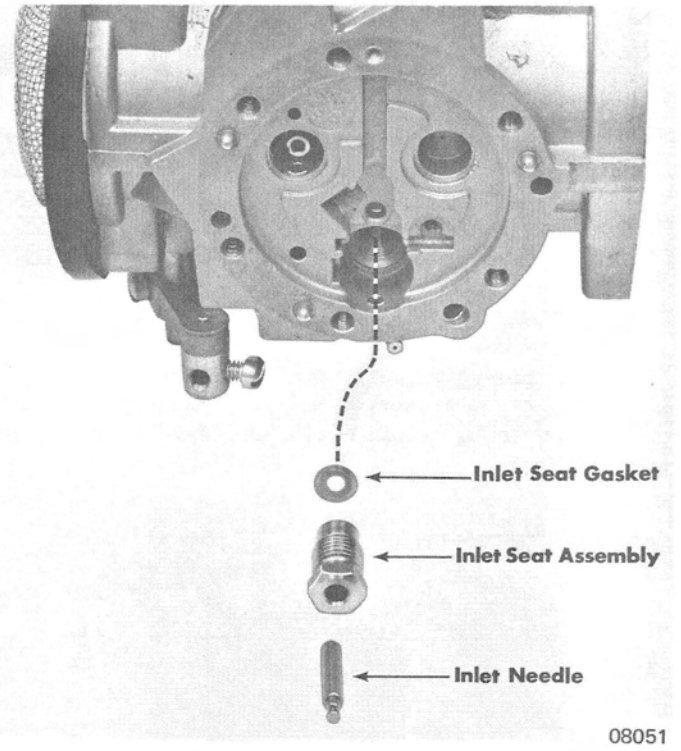

Figure 8. Inlet Needle Assembly

10. Pull inlet needle out of seat assembly. Remove inlet seat assembly and inlet seat gasket. (Figure 8)

    IMPORTANT: Inlet needles and seats are matched sets. Parts MUST NOT be interchanged.

    NOTE: It is not necessary to disassemble carburetor beyond this point for cleaning.

11. Idle discharge ports and main nozzle ball check valve (Figure 7) are sealed from metering chamber by welch plugs. If carburetor is unusually dirty, remove welch plugs. CAREFULLY drill thru welch plugs with 1/8" drill. Allow drill to just break thru welch plug. If drill travels too deep into cavity, casting or main nozzle ball check valve may be damaged. Pry welch plug out of its seat, using a small punch.

CAUTION: DO NOT push drills or wires into discharge holes, passages, orifices or fittings. Carburetor performance may be altered. Blow plugged holes clean with compressed air.

12. Inspect idle discharge holes and main nozzle check ball. Discharge holes must not be plugged and check ball MUST be free in nozzle.

13. If main discharge nozzle must be removed, replace as follows: Remove main nozzle assembly by pressing it out of casting into primary venturi. If a new part is required, press new assembly into nozzle well so that bottom surface of ball cage is flush with surface of nozzle well.

IMPORTANT: Main discharge nozzle pipe MUST be below welch plug to receive an adequate supply of fuel. If check ball is defective, engine will not idle.

NOTE: If choke shaft will be removed on 440 MAX carburetor, remove air screen from front of carburetor.

14. Choke and throttle shafts may be removed if there's evidence of wear on these parts. Shafts need not be removed before cleaning body casting, if parts are not worn. Mark throttle and choke shutters before removing, to aid in reassembly. Edges are tapered for exact fit into carburetor bores. Remove 2 screws and pull throttle shutter out of carburetor body. Remove throttle shaft clip, unhook spring and pull shaft out of casting. Examine shaft and body bearings for wear. If shaft shows excessive wear, replace shaft. If body bearing areas are worn, replace body casting. Remove choke shutter and carefully pull choke shaft from body so that friction ball and spring will not fly out of casting. Inspect shaft and bearings.

REASSEMBLY (Figure 6)

1. Clean all parts before reassembling carburetor. Use a good grade commercial carburetor solvent. After cleaning, blow out all passages and orifices with clean compressed air. Replace all worn parts.
2. Assemble carburetor. Make certain that all parts are kept clean before being assembled to body casting.
   a. Install new seat washer and inlet seat. Torque seat to 40-50 in. lbs.
   b. Assemble inlet control lever. Adjust lever so that center of lever, which contacts metering diaphragm, is flush with metering chamber wall, as shown in Figures 9 and 10.

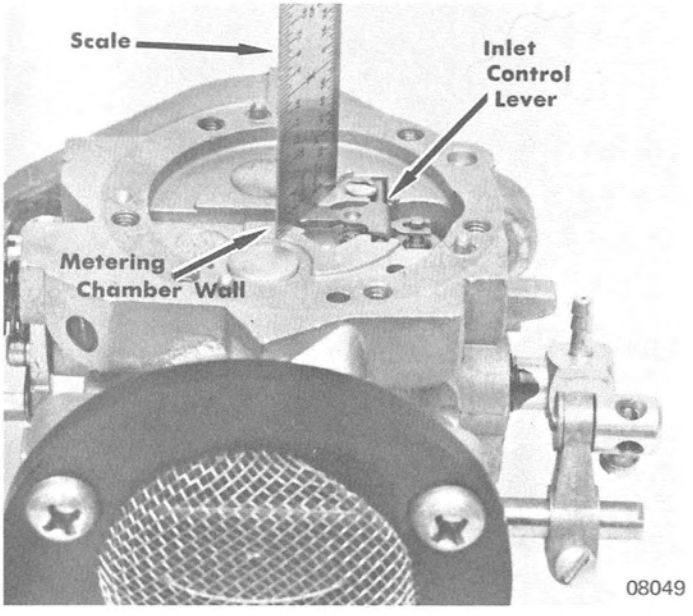

Figure 9. Inlet Control Lever Adjustment

   c. If removed, install new welch plugs at nozzle well and bypass chamber. Place new welch plug into casting counter-bore (convex side up) and flatten to a tight fit with a 5/16" flat end punch.

IMPORTANT: If installed welch plug is concave, it may be loose and cause a fuel leak. Correctly installed welch plug is flat.

   d. Assemble fuel pump gaskets, diaphragms and castings as shown in Figure 6. Parts fit one way only.
   e. Install fuel filter screen, new cover gasket and cover.
   f. Install fixed jet gasket, fixed jet and fixed jet plug.

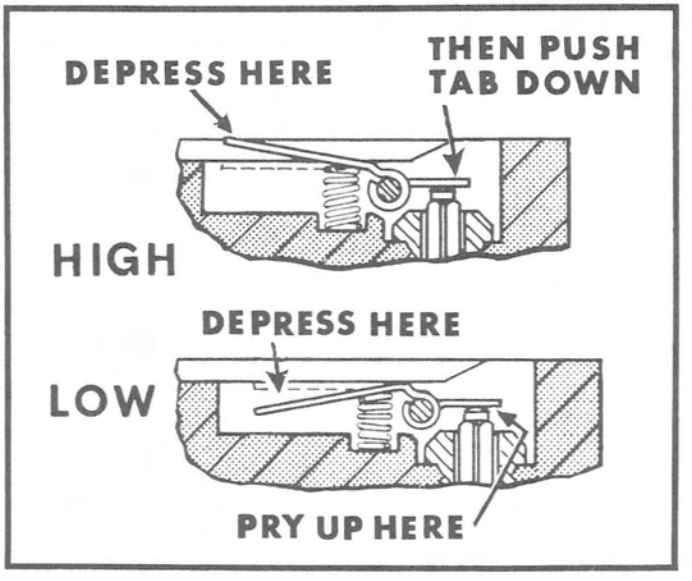

Figure 10. Adjusting Control Lever

   g. Install "O" ring, washer, tension spring and idle mixture screw.

CAUTION: DO NOT turn idle mixture screw tight against seat.

   h. If removed, assemble throttle shaft into carburetor body and attach throttle shaft clip and spring. With shaft secured in place, assemble shutter into shaft. Make certain that shutter fits accurately into throttle bore in closed position. Install tension spring and idle speed screw.

WARNING: Throttle shaft assembly MUST turn freely in carburetor body. Shaft return spring MUST hold shutter in a closed position.

   i. If removed, assemble spring and ball into choke shaft hole and assemble shaft into position. Assemble shutter into choke shaft. Make certain that choke shutter fits tightly to carburetor bore in closed position.

NOTE: On Mark II Model, choke arm is installed as shown in Figure 6. On 440 MAX Model, choke arm is installed on opposite side.

   j. On 440 MAX Model, install carburetor air screen.

INSTALLATION

440 MAX MODEL

1. Clean gasket surfaces.
2. Install new gasket and carburetor on intake manifold and secure with attaching nuts.
3. Connect pulse hose (Figure 5), fuel line and fuel return line (Figure 4) to carburetor.
4. Attach primer hose to carburetor. (Figure 3)
5. Attach throttle return spring to throttle arm.
6. Install operating cable mounting bracket (Figure 3) and torque to specification. (Refer to "Specifications" Section 8.)
7. Refer to Section 7 "Controls", Part D, and connect throttle and choke core wires to carburetor.
8. Refer to "Adjustments", preceding, and adjust carburetor.
9. Close dashboard cover.

MARK II MODEL

1. Clean gasket surfaces.
2. Install new gasket and carburetor on intake manifold and secure with attaching nuts.
3. Attach carburetor air baffle to carburetors.
4. Install engine in chassis. (Refer to "Engine Mechanical" Section 5, Part D.)
5. Refer to "Adjustments", preceding, and adjust carburetors.
6. Close top cowl.

"WDA" and "WRA" CARBURETORS MODELS 340 S/R, 440 MAX (Chassis Serial No. 3709838 and Above), 440 M/X, 440 S/R and MARK II (Chassis Serial No. 3787640 and Above)

TROUBLE CHART

Trouble	Possible Cause	Remedy
Carburetor Floods	Check valve in fuel primer pump stuck open	Replace fuel primer pump.
	Dirt under inlet needle	Remove and clean.
	Metering lever set too high	Readjust.
	Metering lever spring not seated on "dimple" on metering lever	Correct installation.
	Fuel pump diaphragm leaking	Replace diaphragm.
	Dirt under umbrella check valve	Remove and clean or replace.
	Metering lever pin loose or not correctly installed	Tighten retaining screw or correct installation.
	Metering lever tight on pin	Replace damaged part or clean dirt from these parts.
	Inlet needle damaged or worn	Replace needle.
Engine Will Not Idle	Idle speed screw out of adjustment	Readjust.
	Low speed mixture needle set too lean	Readjust.
	Dirt in idle pocket or idle discharge port	Blow out with compressed air.
	Secondary idle holes plugged	Blow out with compressed air.
	Carburetor flooding	See above.
	Low speed mixture needle point damaged	Replace mixture needle.
	Low speed mixture hole damaged, forced, oversize or casting cracked near mixture point	Replace carburetor.
Engine Will Not Accelerate	Low speed mixture needle set too lean	Readjust.
	Engine runs lean	See below.
	Engine runs rich	See below.
Engine Runs Lean	Low fuel supply	Fill fuel tank.
	Filter screen(s) plugged or dirty	Clean or replace.
	Dirt in idle fuel channels	Blow out with compressed air.
	Metering lever set too low	Readjust.
	Check valve diaphragm leaking	Replace diaphragm.
	Hole in metering diaphragm	Replace diaphragm.
	Pulse hose plugged or damaged	Clean or replace.
	Carburetor loose on manifold or manifold gaskets leaking	Tighten carburetor or replace gaskets.
	Fuel pump not operating	Clean fuel pump and replace worn or damaged parts and check assembly to be certain that gaskets, springs, diaphragms and plates are correctly installed.
	Metering lever spring stretched or damaged	Replace spring.
	Air leak in fuel hose(s)	Replace hose(s).
	Fuel hose plugged or pinched	Clean or find restriction of fuel hose.
	Fuel tank vent not operating	Repair vent.
Engine Runs Rich	Carburetor flooding	See above.
	Plugged or restricted air intake	Clean or remove obstruction.
	Fuel return hose plugged or pinched	Clean or find restriction of fuel return hose.

GENERAL

Models 340 S/R, 440 MAX (Chassis Serial No. 3709838 and above), 440 M/X, 440 S/R and Mark II (Chassis Serial No. 3787640 and above) Mercury Snowmobiles use a Walbro WDA or WRA series carburetor (a complete fuel system consisting of a carburetor, integral fuel pump and fuel filter). The diaphragm-controlled metering system allows precise fuel metering to engine at extreme tilt angles and prevents fuel level changes due to vibration.

ADJUSTMENTS

GENERAL

The low speed mixture needle, which controls amount of fuel metered to idle discharge port, has right hand screw threads. Turn needle clockwise to close (lean the mixture) and counterclockwise to open (enrich the mixture). An over-rich low speed mixture will cause the engine to fire unevenly and smoke from the exhaust. A lean, low speed mixture usually will cause backfiring.

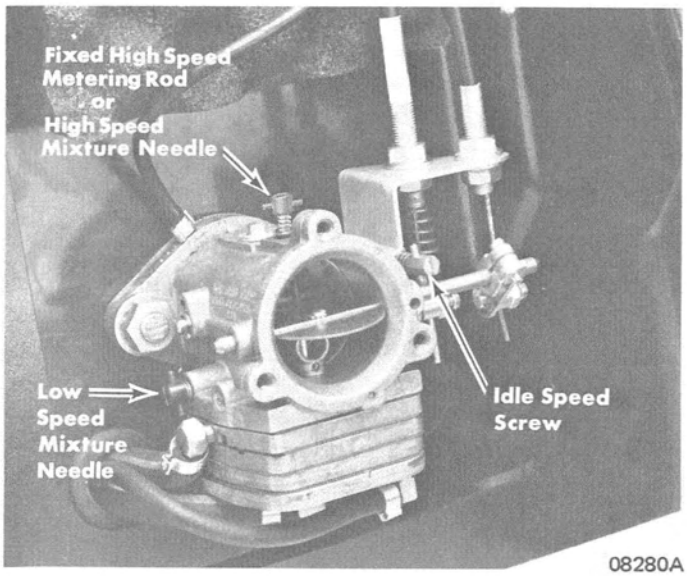

Figure 1. 340 S/R, 440 MAX (Chassis Serial No. 3709838 and Above), 440 M/X and 440 S/R Carburetor

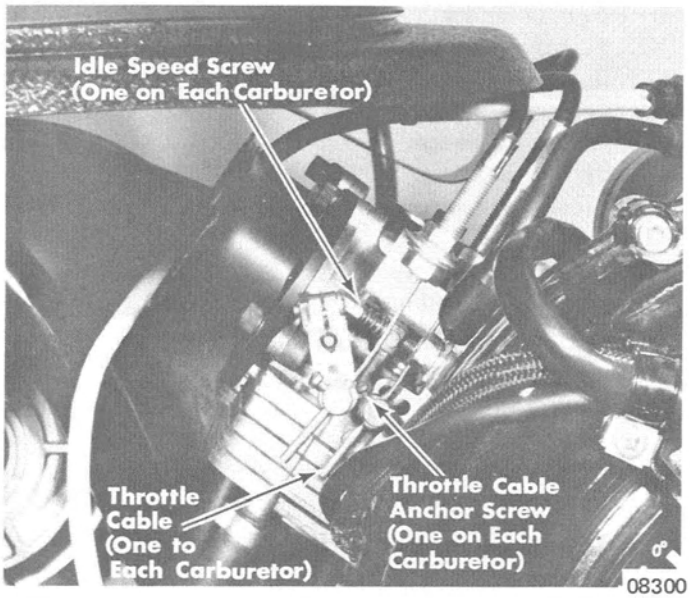

Figure 2. Mark II (Chassis Serial No. 3787640 and Above) Carburetors

MARK II CARBURETOR THROTTLE SHUTTER SYNCHRONIZATION

1. Loosen throttle cable anchor screws on both carburetors. (Figure 2)
2. Back off idle speed screws (Figure 2) so that they will not affect carburetors.
3. Pull throttle cables (Figure 2) to remove all slack, then tighten anchor screws.
4. Refer to "Starting Adjustments" and "Low Speed Adjustments", following, and set idle speed.

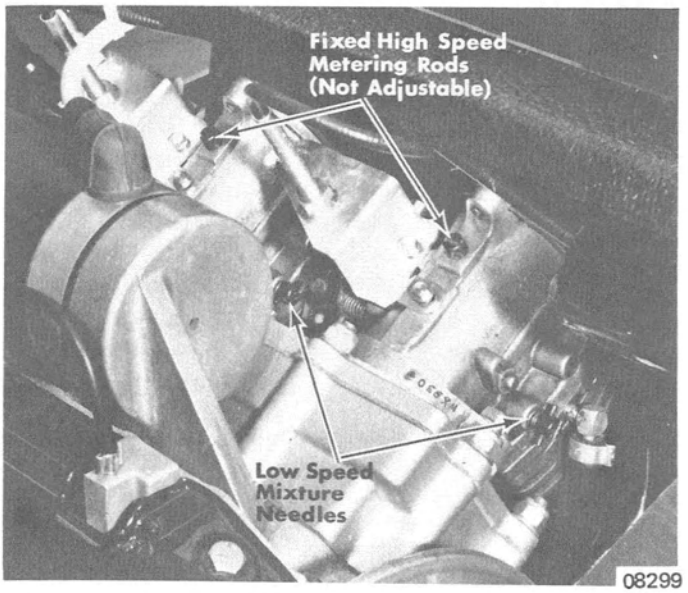

Figure 3. Mark II (Chassis Serial No. 3787640 and Above) Carburetors

STARTING ADJUSTMENTS

1. Low speed mixture adjustment for an out-of-adjustment carburetor (or a carburetor that has not been run on engine) is one (1) full turn open. (Figure 1 or 3)
2. Idle speed should be adjusted as follows:
   a. Turn idle speed screw outward (counterclockwise) until it no longer contacts carburetor throttle linkage. (Figure 1 or 2)
   b. Turn idle speed screw inward (clockwise) until it "just touches" carburetor throttle linkage, then continue to turn inward one (1) turn.

WARNING: Adjust idle speed carefully. Too high of an idle speed may cause drive sheave engagement and movement of snowmobile.

IMPORTANT: Idle speed screws on Mark II carburetors should be turned in equally after "just touching" throttle linkage.

3. Refer to "Starting Procedure", Section 1, and start engine. Until engine is warmed-up, open choke shutter far enough to allow engine to idle. After engine is warmed-up, return choke to full open. DO NOT race a cold engine.

LOW SPEED ADJUSTMENTS

1. Start engine and thoroughly warm before attempting adjustment.
2. Adjust idle speed screw (Figure 1 or 2) to attain recommended idle RPM (refer to "Specifications" Section 8). Turn idle speed screw inward (clockwise) to increase RPM or outward (counterclockwise) to decrease RPM.

   IMPORTANT: Idle speed screws on Mark II carburetors should be adjusted equally.

3. With engine running at idle speed, turn low speed mixture needle outward (counterclockwise) until engine starts to "load up", slow down or fire unevenly, due to over-rich mixture. (Figure 1 or 3)

   WARNING: On Mark II, keep hands and arms clear of sheaves and drive belt at all times. When adjusting low speed mixture needle on No. 2 carburetor (PTO side), use a long shank screwdriver or stop engine each time an adjustment is made.

4. Slowly turn low speed mixture needle inward (clockwise) until engine picks up speed and fires evenly. Turn mixture needle 1/8-turn at-a-time, then wait sufficient time for engine to respond to this adjustment.

   CAUTION: DO NOT adjust carburetor leaner than necessary to attain reasonably smooth operation. IT IS PREFERABLE to operate with mixture SLIGHTLY RICH rather than too lean.

   IMPORTANT: On Mark II, adjust one (1) carburetor at a time. After adjusting one carburetor, stop engine, then adjust second carburetor to same setting. Start engine and check engine performance.

5. Recheck idle RPM and readjust if necessary.

   NOTE: If idle RPM is readjusted, recheck low speed mixture adjustment at recommended idle speed.

6. Stop engine.

HIGH SPEED ADJUSTMENT - 440 MAX, 440 S/R (Chassis Serial No. 3795657 and Below) and Mark II

1. High speed adjustment is not required (carburetor is equipped with a fixed high speed metering rod). (Figure 1 or 3) Refer to "Specifications" Section 8 for metering rod sizes and specifications. Installation of a larger metering rod will result in a leaner fuel mixture at wide-open-throttle. A smaller metering rod will enrich fuel mixture at wide-open-throttle.
2. Sprocket options are available as optional equipment for high elevation operation or operation under various load conditions. Refer to "Chassis" Section 2, Part D, for proper application.

HIGH SPEED ADJUSTMENT - 340 S/R, 440 M/X and 440 S/R (Chassis Serial No. 4064097 and Above)

1. Perform high speed adjustment as follows:
   a. Turn high speed mixture needle inward (clockwise) until it seats lightly, then turn back out 1½-turns.

   IMPORTANT: This approximate setting will permit starting, but may be found too rich or too lean for normal operation; therefore, to obtain peak performance and prevent possible engine damage, as soon as engine starts, correct final adjustments must be made as instructed, following.

   b. Start engine and allow to "warm up" before attempting adjustment.
   c. While operating snowmobile at full throttle (under normal load conditions), slowly turn high speed mixture needle outward (counterclockwise) until engine starts to "load up" or fire unevenly or "four-cycle" because of an over-rich fuel mixture.
   d. At this point, slowly turn high speed mixture needle inward (clockwise) until engine "smooths-out" and fires evenly.

   NOTE: Turn mixture needle 1/8-turn at a time, then wait sufficient time for engine to respond to this adjustment.

   e. Stop engine.

   IMPORTANT: DO NOT adjust carburetor leaner than necessary to attain reasonably smooth operation. It is preferable to operate with mixture SLIGHTLY RICH rather than too lean. If in doubt about high speed adjustment, check coloration of spark plugs after a full throttle run of approximately 100 yards (91.4m). The correct high speed adjustment will result in gray, tan or light brown coloration of spark plug insulator tip. Under normal operating conditions (at sea level), final setting of high speed mixture needle should be 1¼ to 1½-turns open.

2. Sprocket options are available as optional equipment for high elevation operation or operation under various load conditions. Refer to Section 2D, "Chassis", for proper application.

REMOVAL

340 S/R, 440 MAX, 440 M/X and 440 S/R

1. Open dashboard cover and remove carburetor intake silencing chamber.
2. Disconnect throttle and choke core wires from carburetor linkage. (Figure 4) Note location of throttle return spring around throttle core wire (if so equipped).

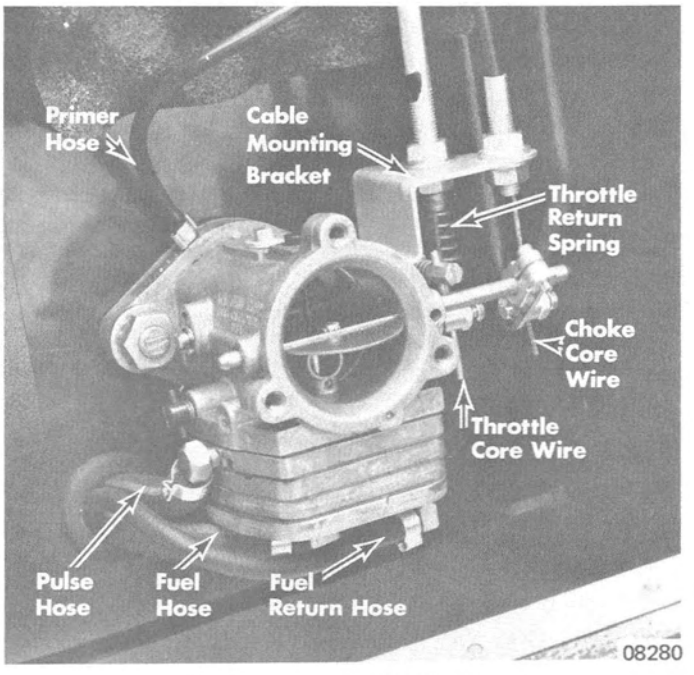

Figure 4. 440 MAX and 440 S/R Carburetor

3. Remove operating cable mounting bracket (Figure 4) from carburetor and move assembly aside.
4. Disconnect primer hose (optional on 340 S/R), pulse hose, fuel hose and fuel return hose from carburetor. (Figure 4)

   NOTE: Fuel hose should be plugged or elevated, if fuel is present in tank.

5. Remove carburetor from intake manifold.

MARK II

1. Open top cowl.
2. Disconnect throttle core wire (Figure 5) from carburetor linkage of carburetor to be removed.
3. If removing rewind side carburetor, disconnect choke core wire (Figure 5) from carburetor linkage.
4. Remove operating cable mounting bracket from carburetor to be removed and move assembly to side.
5. Loosen 2 screws from choke shaft connector (connects right carburetor choke shaft to left carburetor choke shaft) and slide connector to one side.
6. Disconnect pulse hose, fuel hose and fuel return hose from carburetor to be removed.

   NOTE: Fuel hose should be plugged or elevated, if fuel is present in tank.

7. Remove carburetor from intake manifold.

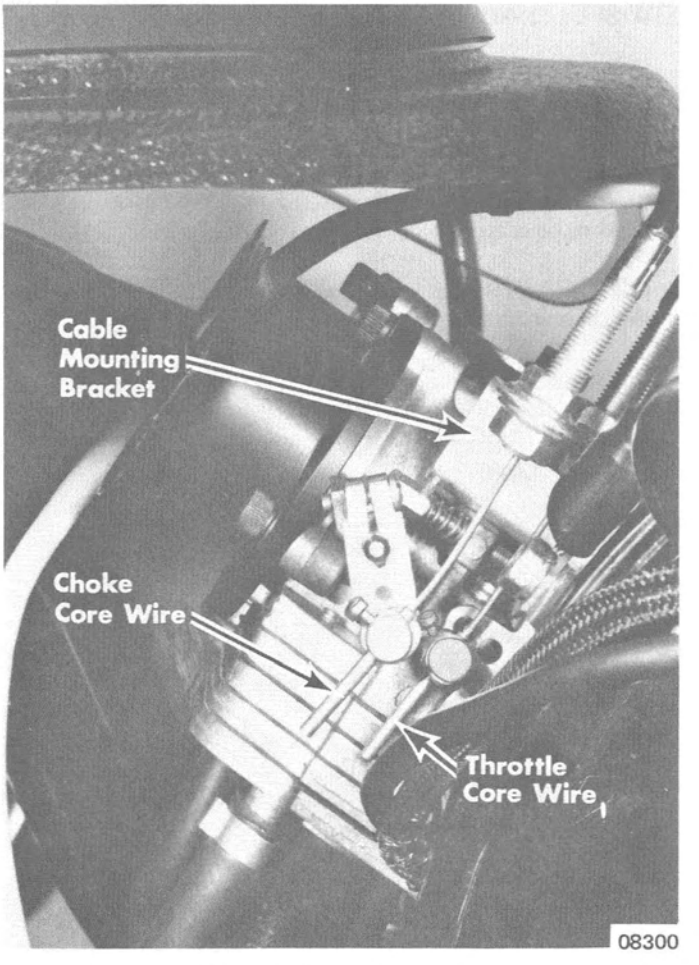

Figure 5. Mark II Carburetors

DISASSEMBLY and CLEANING (Figure 6)

CAUTION: Some solvents and cleaners have a damaging effect on synthetic rubber parts used in carburetors. Use a petroleum product for cleaning. DO NOT use alcohol, lacquer acetone thinner, benzol or any other solvent with a blend of these ingredients, unless rubber parts and gaskets are removed. Entire carburetor should be cleaned by flushing with fuel and blown dry with compressed air BEFORE disassembly. Carburetor should be inspected for cracks in the casting, bent or broken shafts, loose levers or swivels and stripped threads.

1. Remove 4 cover screws from bottom of carburetor.
2. Remove fuel inlet cover plate, inlet gasket and filter screen. Clean filter screen by flushing with fuel or solvent and blowing with compressed air. Inspect plate for nicks, dents or cracks. Replace gasket if holes or creases exist on sealing surface.
3. Remove filter plate, check valve diaphragm and check valve gasket. Inspect plate for nicks, dents or cracks. Inspect diaphragm (must be flat and free of holes and cracks). Replace gasket if holes or creases exist on sealing surface.
4. Remove fuel pump plate, fuel pump diaphragm and fuel pump gasket. Inspect plate for nicks, dents or cracks. Inspect diaphragm (must be flat and free of holes and cracks). Replace gasket if holes or creases are present on sealing surface.
5. Remove 3 check valve springs and fuel pump leaf spring from metering diaphragm plate.

   NOTE: Removal of umbrella check valve or pressure spring from metering diaphragm plate is not necessary unless these parts are being replaced.

(Continued on Page 4A-28)

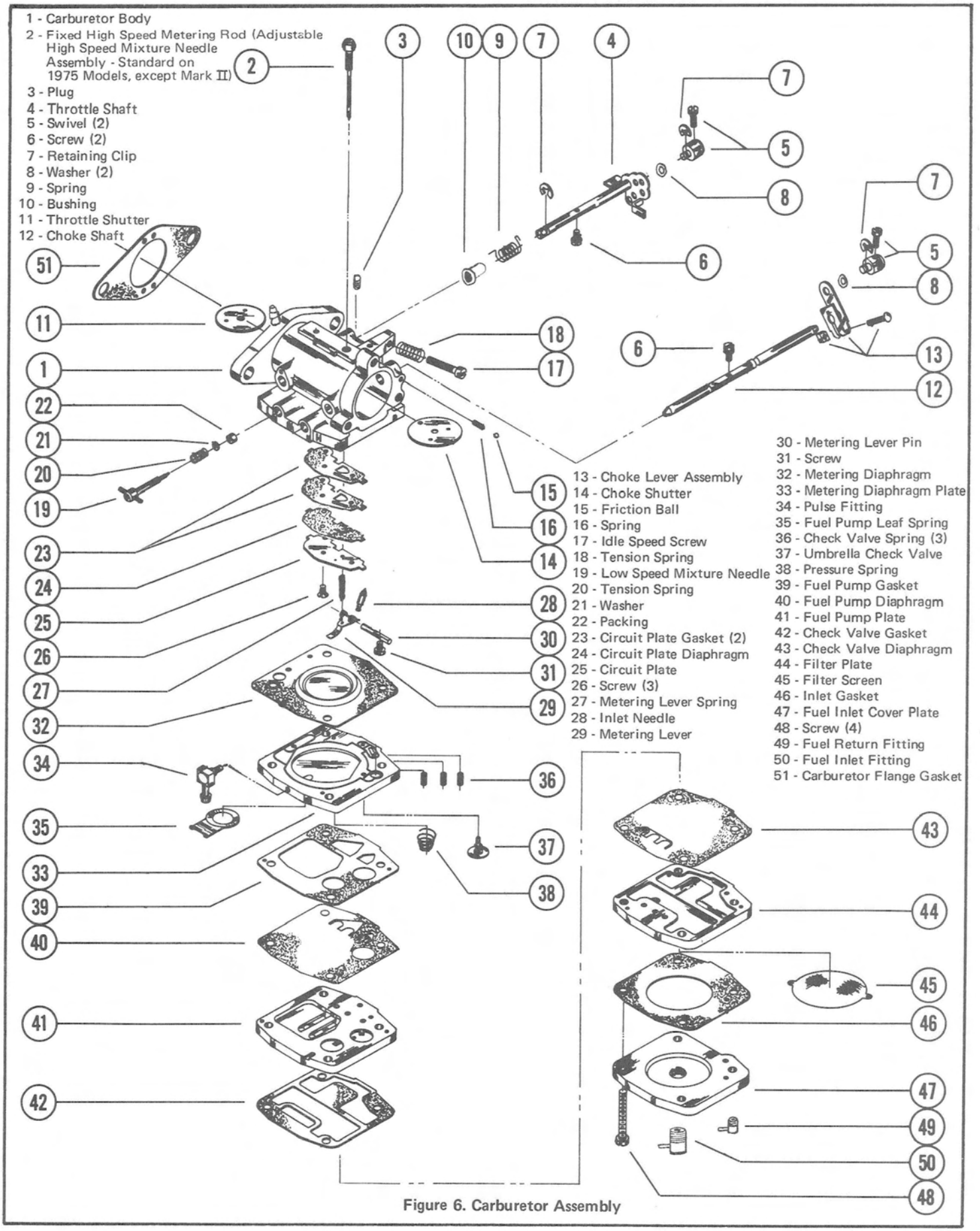

Figure 6. Carburetor Assembly

6. Remove metering diaphragm plate and metering diaphragm from carburetor. Inspect plate for nicks, dents or cracks. Inspect metering diaphragm. Center plate must be riveted securely to diaphragm, and diaphragm must be free of holes and imperfections.
7. Remove metering lever pin screw, metering lever pin, metering lever, metering lever spring and inlet needle. Inspect parts for wear. Metering lever MUST rotate freely on pin.

> **CAUTION: Handle metering lever spring carefully. DO NOT stretch spring or, in any way, change its compression characteristics. If in doubt about its condition, replace spring.**

NOTE: Inlet seat cannot be removed from carburetor body. If inlet seat is damaged, carburetor must be replaced.

8. Remove 3 circuit plate screws, circuit plate, circuit plate diaphragm and 2 circuit plate gaskets. Inspect plate for cracks, scratches and dents. Inspect diaphragm (must be flat and free of holes and cracks). Replace gaskets if holes or creases exist on sealing surface.
9. Remove fixed high speed metering rod (or high speed mixture needle, if so equipped) from carburetor. (Figure 1 or 3)
10. Remove low speed mixture needle (Figure 1 or 3), tension spring, washer and packing. Inspect point of low speed mixture needle, threads and packing for cuts or grooves. If mixture needle is damaged, carefully inspect casting.
11. Choke and throttle shafts may be removed if there is evidence of wear on these parts. Shafts need not be removed before cleaning body casting, if parts are not worn. Mark throttle and choke shutters before removing, to aid in reassembly. Edges of shutters are tapered for an exact fit into carburetor bore and must be properly installed. Remove choke shutter and carefully pull choke shaft from casting so that friction ball and spring will not fly out of casting. Examine shaft for wear. Remove throttle shutter and shaft retaining clip. Unhook spring and pull shaft out of casting. Examine shaft and carburetor body bearings for wear. If shaft shows excessive wear, replace shaft. If body bearing areas are worn, replace body casting.

REASSEMBLY (Figure 6)

1. Clean all parts before reassembling carburetor. Use a good grade commercial carburetor solvent. After cleaning, blow out all passages and orifices with clean compressed air. DO NOT blow off diaphragms with compressed air. Replace all worn parts.
2. Reassemble carburetor. Make certain that all parts are kept clean before being assembled to body casting.
   a. If removed, assemble throttle shaft, spring and bushing into carburetor body and secure with shaft retaining clip. With shaft secured in place, assemble shutter into shaft. Make certain that shutter fits tightly to carburetor bore in closed position when idle speed screw is backed out so that it no longer contacts throttle linkage.

> **WARNING: Throttle shaft assembly MUST turn freely in carburetor body. Shaft return spring MUST hold shutter in a closed position.**

   b. If removed, assemble spring and friction ball into choke shaft hole and assemble shaft into position. Assemble shutter into choke shaft. Make certain that choke shutter fits tightly to carburetor bore in closed position.

NOTE: If idle speed screw was removed from carburetor, screw must be reinstalled before choke shaft is installed.

   c. Install packing, washer, tension spring and low speed mixture needle. (Figure 1 or 3)

> **CAUTION: DO NOT turn low speed mixture needle tight against seat.**

   d. Install fixed high speed metering rod (or high speed mixture needle, if so equipped) into carburetor. (Figure 1 or 3)
   e. Install 2 circuit plate gaskets, circuit plate diaphragm and circuit plate. Secure with 3 circuit plate screws.
   f. **Install inlet needle and metering lever assembly. Secure metering lever pin with screw. Be sure that metering lever spring is properly seated on "dimple" on metering lever. Adjust metering lever so that "bumper" end of lever, which contacts metering diaphragm, is "flush" with surface of carburetor body casting. (Figures 7 and 8)**

> **CAUTION: When adjusting metering lever, hold down "bumper" end of lever and bend inlet needle end. DO NOT press down on inlet needle.**

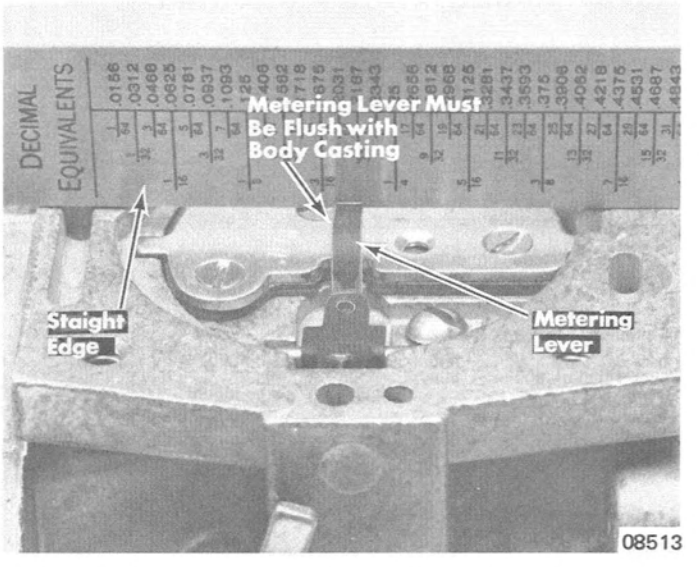

Figure 7. Checking Metering Lever Setting

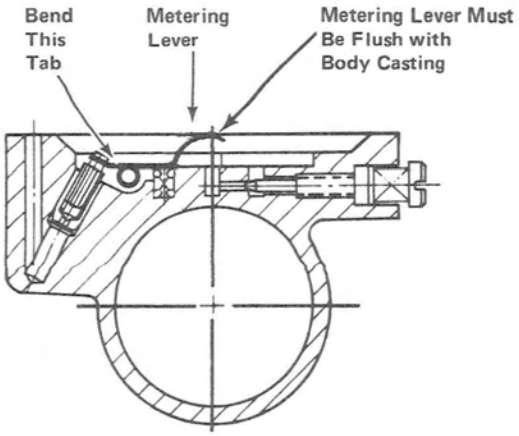

g. Assemble fuel pump gaskets, diaphragms, plates, springs and filter screen, as shown in Figure 6. Parts fit one way only. Secure with 4 screws.
h. Refer to "Starting Adjustments", preceding, and adjust carburetor.

Figure 8. Adjusting Metering Lever

INSTALLATION

340 S/R, 440 MAX, 440 M/X and 440 S/R

1. Clean gasket surfaces.
2. Install new gasket and carburetor on intake manifold and secure with attaching nuts.
3. Connect fuel hose, fuel return hose, pulse hose and primer hose (optional on 340 S/R) to carburetor. (Figure 4) Clamp each hose securely at carburetor fitting.
4. Install operating cable mounting bracket (Figure 4) on carburetor.
5. Refer to Section 7 "Controls", Part D, and connect throttle and choke core wires to anchors. Be sure that throttle return spring (if so equipped) is properly positioned around throttle core wire.
6. Refer to "Low Speed Adjustments", preceding, and adjust carburetor.
7. Install carburetor intake silencing chamber and close dashboard cover.

MARK II

1. Clean gasket surfaces.
2. Install new gasket and carburetor on intake manifold and secure with attaching nuts.
3. Connect pulse hose, fuel hose and fuel return hose to carburetor. Clamp each hose securely at carburetor fitting.
4. With choke shutter on each carburetor full open, position choke shaft connector in place between choke shafts and tighten 2 screws.
5. Install operating cable mounting bracket on carburetor being reinstalled. (Figure 5)
6. Refer to Section 7 "Controls", Part D, and connect throttle core wire (and choke core wire if rewind side carburetor) to anchor. (Figure 5)
7. Refer to "Low Speed Adjustments", preceding, and adjust carburetor(s).
8. Close top cowl.

MIKUNI "VM 36-9" CARBURETOR
MODEL 400 S/T

GENERAL

The Mercury 400 S/T Snowmobile uses dual Mikuni VM series carburetors (a high performance tuning carburetor which incorporates an independent float system that is effective in maintaining a constant fuel level). The float system is equipped with a fuel surface stabilizing plate which prevents "rippling" of the fuel surface (helps maintain a constant fuel level and keeps the fuel surface stabilized during operation at varying engine speeds and over rough terrain). Fuel is supplied to the carburetors by an external, chassis-mounted fuel pump.

ADJUSTMENTS

GENERAL

The low speed mixture needle, which controls amount of air metered to idle circuit, has right hand screw threads. Turn needle clockwise (inward) to enrich the mixture and counter-clockwise (outward) to lean the mixture. An over-rich low speed mixture will cause the engine to "load up" or slow down or fire unevenly. A lean, low speed mixture usually will cause backfiring and hesitation during acceleration.

JET NEEDLE ADJUSTMENT (Figure 1)

Each carburetor is equipped with an adjustable jet needle (located in throttle valve) which controls air/fuel mixture ratio when throttle valve is between ¼ and ¾ open. Changing location of jet needle "E" ring in jet needle slots will control fuel mixture ratio during these throttle valve openings (¼ to ¾). Lean mixture at this range by placing "E" ring in a higher slot on jet needle. Enrich mixture by placing "E" ring in a lower slot on jet needle.

"E" ring was in center slot (3rd slot from top) on jet needle when snowmobile was shipped from factory. "E" ring SHOULD BE repositioned in 4th slot from top for ALL trail riding or slower speed applications. During operation under race conditions ONLY, it will be necessary to reposition "E" ring in center slot on jet needle to maintain maximum performance. If readjustment is necessary, refer to "Disassembly and Cleaning", following.

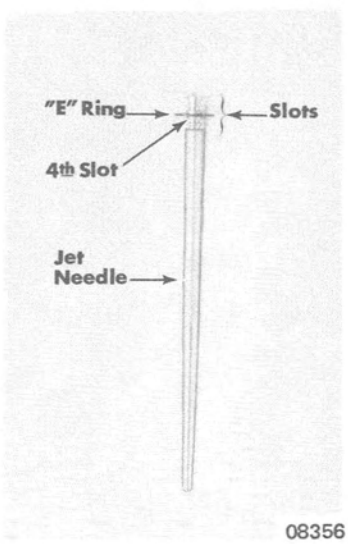

Figure 1. Carburetor Jet Needle

CAUTION: An improperly adjusted jet needle ("E" ring NOT in 4th slot in jet needle) may result in serious engine damage.

THROTTLE VALVE REPLACEMENT

A throttle valve is located in venturi of each carburetor. Each throttle valve is stamped with a number which indicates size of its cutaway side (edge away from engine). As number on throttle valve increases, so does size of "cutaway". Size of throttle valve "cutaway" affects air/fuel mixture ratio when throttle valve opening is between 1/8 and ½, especially in the range of 1/8 and ¼ opening. Lean the mixture at this range by installing a throttle valve with a larger "cutaway" (higher number). Enrich the mixture by installing a throttle valve with a smaller "cutaway" (lower number).

Under most applications, the original (factory installed) throttle valve will give maximum performance and should not require replacement. If replacement is necessary, refer to "Disassembly and Cleaning", following.

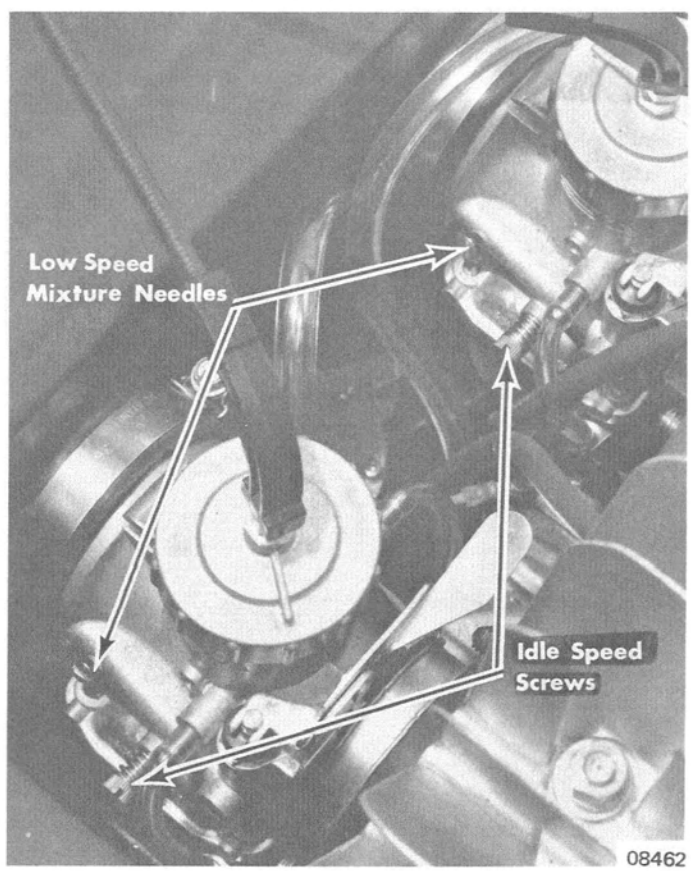

Figure 2. Sno-Twister Carburetors

CARBURETOR THROTTLE VALVE SYNCHRONIZATION

1. Remove carburetor air intake silencer from carburetors and turn idle speed screws (Figure 2) on carburetors outward (counterclockwise) until they no longer contact throttle valves.
2. Actuate throttle control lever while checking throttle valves for simultaneous movement. If one throttle valve moves before other throttle valve, adjust as follows:

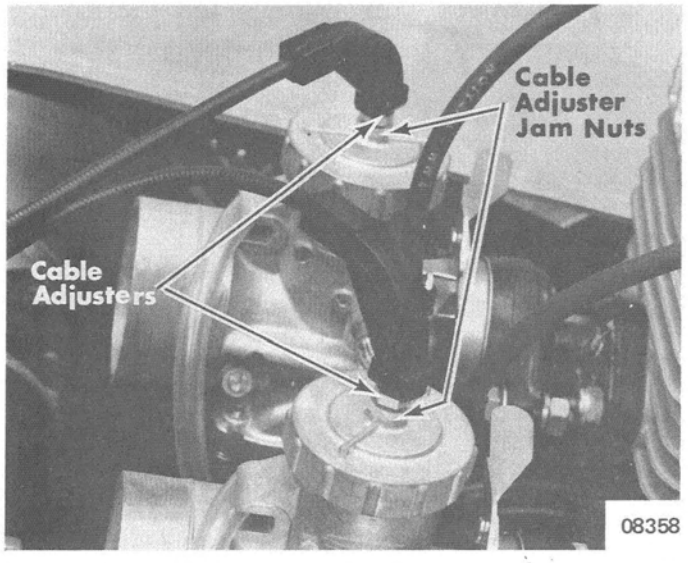

Figure 3. Cable Adjusters

   a. Loosen cable adjuster jam nut (Figure 3) on each carburetor.
   b. Turn cable adjuster(s) (Figure 3) until both throttle valves are synchronized (move at same time) and "slack" is removed from cables.
   c. Tighten cable adjuster jam nut on each carburetor.
3. Reinstall carburetor air intake silencer.
4. Refer to "Starting Adjustments" and "Low Speed Adjustments", following, and set idle speed.

STARTING ADJUSTMENTS

1. Refer to "Carburetor Throttle Valve Synchronization", preceding, and synchronize carburetors.
2. Initial low speed mixture adjustment for an out-of-adjustment carburetor (or a carburetor that has not been run on engine) is 1½ turns open on low speed mixture needle. (Figure 2)

   NOTE: Low speed mixture needles should be adjusted equally on each carburetor.

3. Initial idle speed setting should be adjusted as follows:
   a. Turn idle speed screws (Figure 2) outward (counterclockwise) until they no longer contact throttle valves.
   b. Turn idle speed screws inward (clockwise) until they "just touch" carburetor throttle valves, then continue to turn inward 3 full turns.

   NOTE: Idle speed screws on carburetors should be turned in equally after "just touching" throttle linkage.

WARNING: Adjust idle speed carefully. Too high idle speed may cause drive sheave engagement and movement of snowmobile.

LOW SPEED ADJUSTMENTS

1. Refer to "Starting Procedure", Section 1, and start engine. Return start levers to "raised" position and thoroughly warm engine before attempting adjustment.

CAUTION: DO NOT race a cold engine.

2. Adjust idle speed screws (Figure 2) to attain recommended idle RPM (refer to "Specifications" Section 8). Turn idle speed screws inward (clockwise) to increase RPM or outward (counterclockwise) to decrease RPM.

   IMPORTANT: Idle speed screws control the amount of throttle valve opening at idle setting. Idle speed screws should be adjusted identical so that each idle speed screw will make contact with its respective throttle valve.

3. With engine running at idle speed, turn low speed mixture needles inward (clockwise) until engine starts to "load up" or slow down or fire unevenly because of an over-rich fuel mixture.
4. Slowly turn low speed mixture needles outward (counterclockwise) until engine picks up speed and fires evenly. Turn mixture needles 1/8-turn at a time, then wait sufficient time for engine to respond to this adjustment.

   IMPORTANT: DO NOT adjust carburetors leaner than necessary to attain reasonably smooth idling. It is preferable to set low speed mixture a little RICH than too lean.

5. Recheck idle RPM and readjust idle speed screws if necessary.

   NOTE: If idle RPM is readjusted, recheck low speed mixture adjustment at recommended idle speed.

6. Stop engine.

HIGH SPEED ADJUSTMENT

1. Each carburetor is equipped with a replaceable fixed high speed jet (located in carburetor float bowl). (Figure 4) Each jet is stamped with a number which indicates maximum amount of fuel flow that it can meter; i.e., No. 310 stamped on jet indicates that 310cc of fuel can be metered thru that jet in one (1) minute.

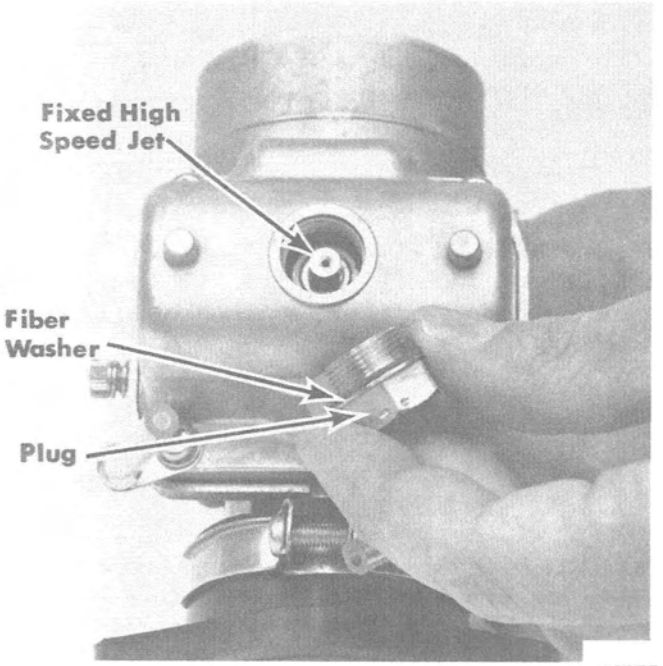

08355

Increase in temperature and/or elevation will require installation of smaller fixed high speed jet, and a decrease in temperature and/or elevation will require installation of a larger fixed high speed jet to maintain maximum engine performance and prevent possible engine damage. (Refer to "Carburetor Fixed High Speed Jet-Elevation/Temperature Chart", following.)

Information in the following carburetor jet chart is general in nature and intended only as a guide in determining proper fixed high speed jets for conditions of operation. When selecting carburetor jets, keep in mind that many factors, such as temperature, elevation, humidity and terrain, have a marked effect on engine performance which could result in deviations from this guide.

(Continued on Page 4A-33)

Figure 4. Carburetor Fixed High Speed Jet

CARBURETOR FIXED HIGH SPEED JET ELEVATION/TEMPERATURE CHART

TEMPERATURE	ELEVATION				
	Up to 2500' (762.5m)	2500' (762.5m) - 5000' (1525m)	5000' (1525m) - 7500' (2287m)	7500' (2287m) - 10,000' (3050m)	10,000' (3050m) and Up
	Jet Size	Jet Size	Jet Size	Jet Size	Jet Size
+60°F	No. 250				
↑	No. 260	No. 250			
	No. 270	No. 260	No. 250		
	No. 280	No. 270	No. 260	No. 250	
	No. 290	No. 280	No. 270	No. 260	No. 250
	No. 300	No. 290	No. 280	No. 270	No. 260
+25°F	No. 310	No. 300	No. 290	No. 280	No. 270
+30°F	No. 310	No. 300	No. 290	No. 280	No. 270
↑	No. 320	No. 310	No. 300	No. 290	No. 280
0°F	No. 330	No. 320	No. 310	No. 300	No. 290
0°F	No. 330	No. 320	No. 310	No. 300	No. 290
↓	No. 340	No. 330	No. 320	No. 310	No. 300
	No. 360	No. 340	No. 330	No. 320	No. 310
-30°F	No. 380	No. 360	No. 340	No. 330	No. 320

Refer to Section 8 "Specifications" for part numbers of fixed high speed jets.

CAUTION: A SPARK PLUG CHECK, as outlined following, MUST BE PERFORMED to determine if proper fixed high speed jets have been installed in carburetors. Information in the preceding chart is general in nature and intended ONLY AS A GUIDE in determining proper fixed high speed jets for conditions of operation.

After installation of different fixed high speed jets, or if operating conditions change, a spark plug check MUST BE MADE to maintain maximum engine performance and prevent possible engine damage. Check spark plugs as follows:

a. Perform a "full throttle speed run" of approximately 100 yards.
b. Stop engine and remove spark plugs. The proper fuel/air mixture will cause spark plug insulator tip to turn gray, tan or light brown. A lean fuel/air mixture will cause insulator tip to turn light gray or chalk white. (Install larger, fixed high speed jets.) A rich fuel/air mixture will cause insulator tip to turn black and oily. (Install smaller, fixed high speed jets.)

IMPORTANT: Champion N55G (C-33-68458) spark plugs are easier to "read" than Champion N-19V (C-33-68546) spark plugs. The N55G spark plug is suitable for racing and may be used.

c. Reinstall spark plugs and replace fixed high speed jets as necessary. If jets are replaced, recheck spark plugs as outlined under Steps "a" and "b", preceding, until proper mixture is attained.

CAUTION: When in doubt about fixed high speed jet selection, ALWAYS select a "richer" jet. Jets which are too "lean", will cause severe internal engine damage, while jets which are too "rich" will result in only a fouled plug. This caution is especially important during initial "break-in" or trail riding applications.

2. Sprocket options are available as optional equipment for high elevation operation or operation under various load conditions. Refer to "Chassis" Section 2D for available sprockets.

REMOVAL

1. Open top cowl.
2. Remove carburetor air intake silencer from carburetors.
3. Close fuel shut-off valve at fuel tank and disconnect fuel hose from carburetor to be removed.
4. Unscrew throttle body cover from carburetor (to be removed) and remove throttle cable body cover, spring, jet needle and throttle valve from carburetor as an assembly. (Figure 5)
5. Remove carburetor from cylinder.

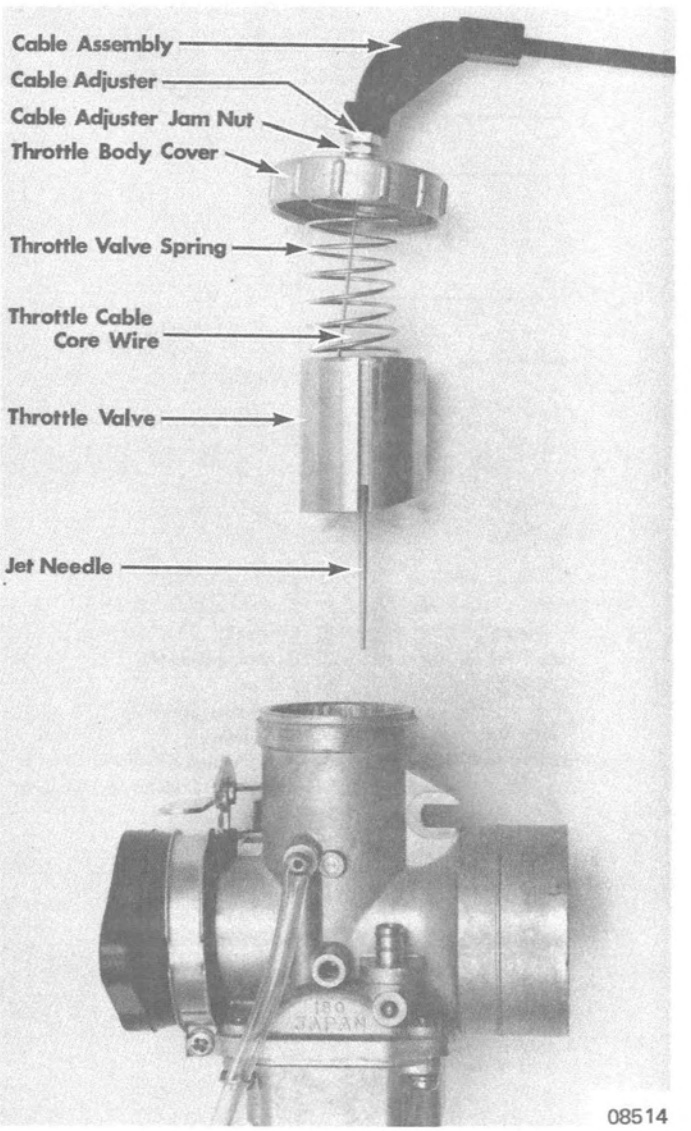

Figure 5. Carburetor Removal/Installation

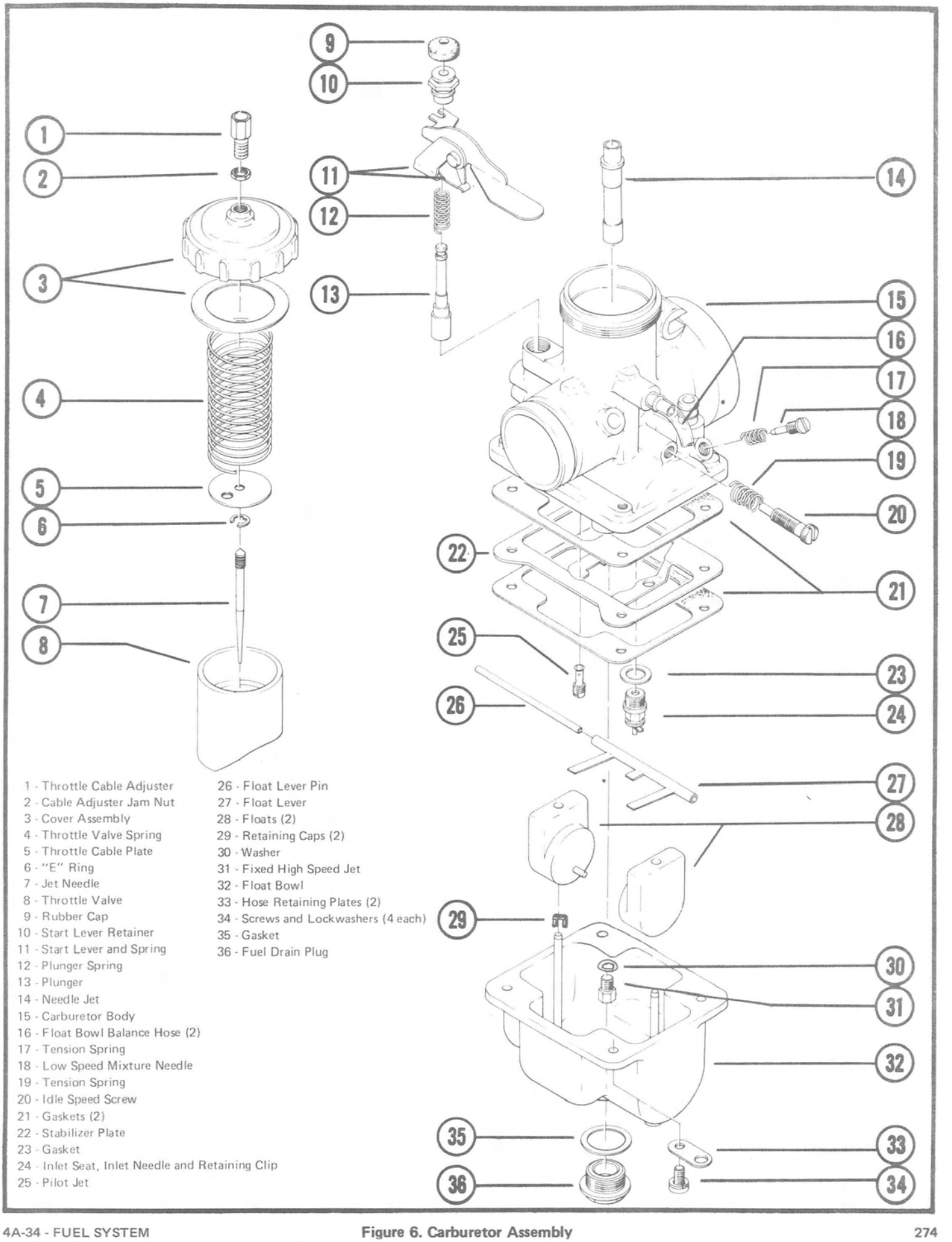

1 - Throttle Cable Adjuster
2 - Cable Adjuster Jam Nut
3 - Cover Assembly
4 - Throttle Valve Spring
5 - Throttle Cable Plate
6 - "E" Ring
7 - Jet Needle
8 - Throttle Valve
9 - Rubber Cap
10 - Start Lever Retainer
11 - Start Lever and Spring
12 - Plunger Spring
13 - Plunger
14 - Needle Jet
15 - Carburetor Body
16 - Float Bowl Balance Hose (2)
17 - Tension Spring
18 - Low Speed Mixture Needle
19 - Tension Spring
20 - Idle Speed Screw
21 - Gaskets (2)
22 - Stabilizer Plate
23 - Gasket
24 - Inlet Seat, Inlet Needle and Retaining Clip
25 - Pilot Jet
26 - Float Lever Pin
27 - Float Lever
28 - Floats (2)
29 - Retaining Caps (2)
30 - Washer
31 - Fixed High Speed Jet
32 - Float Bowl
33 - Hose Retaining Plates (2)
34 - Screws and Lockwashers (4 each)
35 - Gasket
36 - Fuel Drain Plug

Figure 6. Carburetor Assembly

DISASSEMBLY and CLEANING (Figure 6)

CAUTION: Some solvents and cleaners have a damaging effect on synthetic rubber parts used in carburetors. DO NOT use alcohol, lacquer acetone thinner, benzol or any other solvent with a blend of these ingredients, unless rubber parts and gaskets are removed. Entire carburetor should be cleaned by flushing with fuel and blown dry with compressed air BEFORE disassembly. Carburetor should be inspected for cracks in the castings and stripped threads.

1. Remove throttle cable from cover and throttle valve assembly as follows:
   a. Compress throttle valve spring (Figure 5) into cover assembly and hold.
   b. Turn throttle valve upside-down, allowing throttle cable plate and jet needle to drop out of throttle valve.
   c. Remove throttle cable core wire from throttle valve by pushing core wire toward throttle valve, sliding it over in slot and pulling it out of throttle valve. Inspect ramp on side of throttle valve, which contacts idle speed screw, for wear.
   d. Remove throttle valve spring from around core wire.
   e. Loosen cable adjuster jam nut (Figure 5), remove cable adjuster from cover and pull cable assembly from cover.
2. Remove carburetor adaptor flange from carburetor.
3. Remove 4 float bowl screws and remove float bowl and gasket from carburetor body. Inspect float bowl for cracks, nicks or dents. Replace gasket, if holes or creases exist on sealing surfaces. Check starter jet in float bowl passage to be sure that it is open and not plugged by dirt or other foreign object(s). If desired, remove floats by removing small retaining caps on float pins and lifting floats off pins. Remove fuel drain plug and gasket from bottom of float bowl.
4. Remove float lever pin and float lever. Inspect parts for wear. Float lever MUST rotate freely on pin.
5. Remove stabilizer plate and gasket from carburetor body. Replace gasket if holes or creases are present on sealing surfaces.
6. Remove retaining clip and inlet needle from inlet seat. Remove inlet seat and gasket from carburetor. Carefully inspect inlet needle and inlet seat for grooves and scratches or any other condition which could result in fuel leakage past needle when "seated".

IMPORTANT: Inlet needle and seat are a matched set. Parts MUST NOT be interchanged. If either part requires replacement, replace both.

7. Remove pilot jet from carburetor body casting. Inspect pilot jet for damaged threads and plugged or restricted orifices.
8. Remove needle jet by removing fixed high speed jet and washer. Pull needle jet thru throttle valve chamber and out of carburetor. Inspect fixed high speed jet and needle jet for damaged threads and plugged or restricted passages.
9. Remove start lever and plunger assembly from carburetor by removing start lever retainer and lifting assembly from carburetor passage. Remove start lever and start lever spring from retainer. Remove rubber cap from start lever retainer and pull plunger and plunger spring from retainer. Inspect rubber insert in bottom of plunger for cuts, scratches or cracks which could cause fuel leakage when plunger is seated.
10. Remove 2 float bowl balance hoses from carburetor fittings.
11. Remove low speed mixture needle (Figure 2) and tension spring from carburetor body. Inspect point of low speed mixture needle and threads for scratches, cuts or grooves. If mixture needle is damaged, carefully inspect carburetor body casting.
12. Remove idle speed screw (Figure 2) and tension spring from carburetor body. Inspect idle speed screw for damaged threads and damaged point, as a result of throttle valve hitting screw, and be sure that screw is not bent.
13. Carefully inspect carburetor body casting for cracks, stripped threads, plugged or restricted passages and passage plugs which may show signs of leakage.

CAUTION: DO NOT push drills or wires thru passages, holes or metering jets of carburetor, as it may alter carburetor performance. Blow holes clean with compressed air.

14. Thoroughly clean all carburetor parts. Use a good grade commercial carburetor solvent. After cleaning, blow out all passages and orifices with clean compressed air. Replace all worn parts.

REASSEMBLY (Figure 6)

IMPORTANT: Make certain that all parts are kept clean during reassembly of carburetor.

1. Install tension spring and idle speed screw. (Figure 2)
2. Install tension spring and low speed mixture needle. (Figure 2)

CAUTION: DO NOT turn low speed mixture needle tight against seat.

3. Install 2 float bowl balance hoses on carburetor fittings.
4. Place plunger spring around plunger and install in start lever retainer. Install rubber cap over plunger shaft and into groove in retainer. Place start lever spring and start lever in position on start lever retainer. Install start lever and plunger assembly into carburetor.

   NOTE: Dimple on start lever spring should be aligned with hole in start lever assembly.

5. Install needle jet (fits one way only) into carburetor and secure with washer and fixed high speed jet.
6. Install pilot jet into carburetor body.

7. Install inlet seat gasket and inlet seat. Place inlet needle in inlet seat and secure in position with retaining clip.
8. BEFORE installing stabilizer plate and gaskets, install float lever and secure in place with float lever pin. Check float lever adjustment, as shown in Figure 7, and adjust as necessary. Float lever, when properly adjusted, should be .66" to .74" (17mm to 19mm) from gasket surface of carburetor bowl (with gaskets removed) to top edge of float lever with inlet needle closed. (Figure 7)

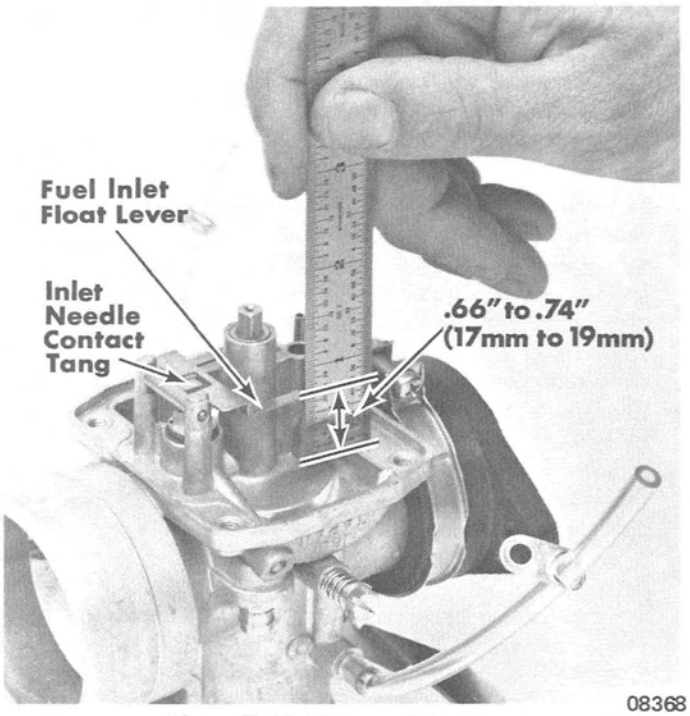

Figure 7. Float Lever Adjustment

9. Remove float lever pin and float lever. Install gasket, stabilizer plate, float lever and float lever pin.
10. Install gasket and fuel drain plug in bottom of carburetor float bowl. Place floats on float pins with ends marked "UP" toward carburetor body. Secure floats with small retaining caps. Place gasket and float bowl assembly in position and secure with 4 screws and 4 lockwashers.

NOTE: Two float bowl screws on cylinder side of carburetor should have hose retaining plates installed beneath lockwashers.

11. Install carburetor adaptor flange on carburetor. Tighten flange clamp securely.

> **CAUTION: Carburetor adaptor flanges MUST BE installed correctly. Serious internal engine damage may result if adaptors are installed upside-down.**

12. Reinstall throttle cable in cover and throttle valve assembly as follows:
    a. Insert throttle cable core wire thru hole in cover and install cover on cable adjuster. DO NOT tighten cable adjuster or adjuster jam nut at this time.
    b. Place throttle valve spring around throttle cable core wire. Compress spring into cover assembly and hold in this position.
    c. Install throttle cable core wire into throttle valve by inserting core wire thru hole in throttle valve, sliding cable over in slot and pulling back into recess.
    d. Refer to "Jet Needle Adjustment", preceding, and check location of "E" ring in jet needle slots. (Figure 1)
    e. Install jet needle in throttle valve. Place throttle cable plate in throttle valve. Be sure that throttle cable plate is properly positioned on top of jet needle and with flange on plate inserted in throttle cable core wire slot to prevent core wire from moving over in slot.
    f. Release throttle valve spring into throttle valve. When spring is properly positioned, it will hold throttle cable plate and jet needle securely in throttle valve.

INSTALLATION

1. Install carburetor on engine cylinder.
2. Install throttle valve and cover assembly into carburetor. (Figure 5) Tighten throttle body cover securely.

> **WARNING: BE SURE that throttle valve is installed all the way into carburetor throat. If throttle valve is installed improperly, guide pin will hold throttle valve open, resulting in a full throttle condition. Serious damage may result if snowmobile engine is started when carburetors are improperly assembled.**

NOTE: Throttle valve fits one-way only. Pin in carburetor body rides in slot on side of throttle valve when valve is properly positioned. If desired, throttle body cover may be "safety-wired" to prevent loosening.

3. Connect fuel hose to carburetor fitting and open fuel shut-off valve at fuel tank.
4. Refer to "Carburetor Throttle Valve Synchronization", preceding, and synchronize throttle valves.
5. Refer to "Starting Adjustments", preceding, and adjust carburetor(s) to initial settings.
6. Install carburetor air intake silencer on carburetors.
7. Refer to "Low Speed Adjustments" and "High Speed Adjustment", preceding, and perform final carburetor adjustments.
8. Close top cowl.

MIKUNI "VM 36-23" and "VM 36-24" CARBURETORS MODELS 340 S/T and 440 S/T

GENERAL

Mercury 340 S/T and 440 S/T Snowmobiles use dual Mikuni VM series carburetors (a high performance tuning carburetor which incorporates an independent float system that is effective in maintaining a constant fuel level). These carburetors are equipped with adjustable low speed mixture needles, adjustable jet needles (mid-range) and adjustable high speed mixture needles, in addition to fixed high speed jets. Fuel is supplied to carburetors by an external, chassis-mounted fuel pump.

ADJUSTMENTS

CARBURETOR THROTTLE VALVE SYNCHRONIZATION

1. Remove carburetor air intake silencer from carburetors and turn idle speed screws (Figure 1) on carburetors outward (counterclockwise) until they no longer contact throttle valves.
2. Actuate throttle control lever while checking throttle valves for simultaneous movement. If one throttle valve moves before other throttle valve, an adjustment of throttle cables is necessary. Adjust throttle cables as follows:

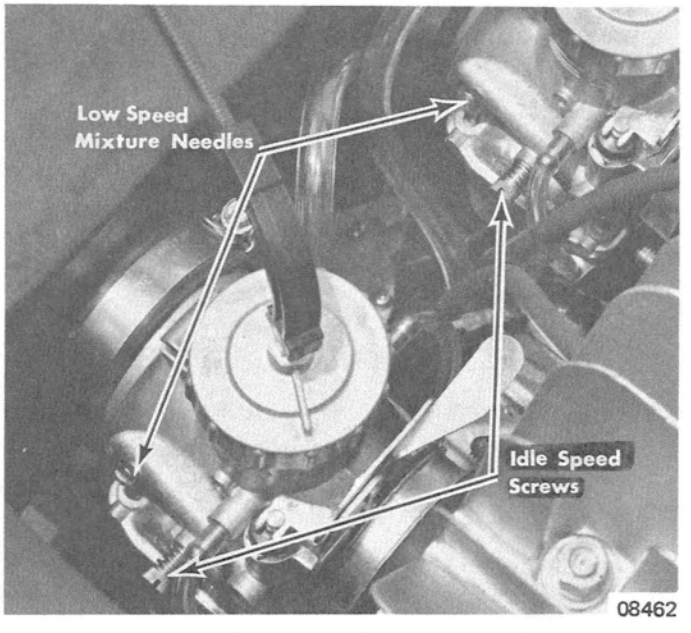

Figure 1. Carburetors

   a. Loosen cable adjuster jam nut on each carburetor. (Figure 2)
   b. Turn cable adjuster(s) (Figure 2) until both throttle valves are synchronized (move at same time), and "slack" is removed from cables.
   c. Tighten cable adjuster jam nut on each carburetor.
   d. Refer to "Starting Adjustment", following, and set idle speed screws.
3. Reinstall carburetor air intake silencer.
4. Refer to "Idle Adjustments", following, and check idle speed.

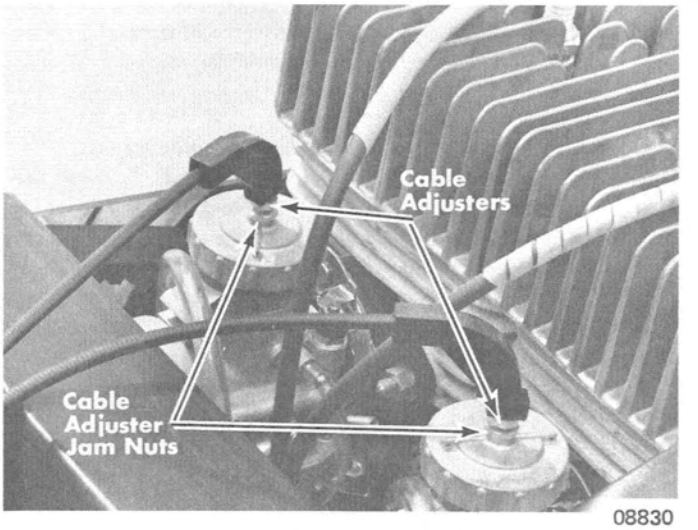

Figure 2. Cable Adjusters

STARTING ADJUSTMENTS

1. Synchronize carburetors as outlined under "Carburetor Throttle Valve Synchronization", preceding.
2. Initial low speed mixture should be adjusted as follows:
   a. Turn low speed mixture needles (Figure 1) inward (clockwise) until they seat lightly.
   b. Turn low speed mixture needles back out 1½-turns.
3. Initial idle speed setting should be adjusted as follows:
   a. Turn idle speed screws (Figure 1) outward (counterclockwise) until they no longer contact throttle valves.
   b. Turn idle speed screws inward (clockwise) until they "just touch" carburetor throttle valves, then continue to turn inward 3 full turns.

WARNING: Adjust idle speed carefully. Too high idle speed may cause drive sheave engagement and movement of snowmobile.

NOTE: Idle speed screws should be turned in equally after "just touching" throttle valves.

IDLE ADJUSTMENTS

1. Start engine and allow to "warm up" before attempting adjustment.

2. Set idle speed screws (Figure 1) to attain recommended idle RPM (refer to "Specifications" Section 8). Turn idle speed screws inward (clockwise) to increase idle RPM or outward (counterclockwise) to decrease idle RPM.

   IMPORTANT: Idle speed screws control the amount of throttle valve opening at idle setting. Idle speed screws should be adjusted identically so that each idle speed screw will make contact with its respective throttle valve.

3. With engine running at idle speed, turn low speed mixture needles inward (clockwise) until engine starts to "load up" or slow down or fire unevenly, because of an over-rich fuel mixture.
4. Slowly turn low speed mixture needles outward (counterclockwise) until engine picks up speed and fires evenly.

   NOTE: Adjust one (1) carburetor at-a-time. Turn low speed mixture needles approximately 1/8-turn at-a-time, then wait sufficient time for engine to respond to this adjustment.

   IMPORTANT: Low speed mixture needles REGULATE AIR RATHER THAN FUEL at idle speed. Turning the low speed mixture needles inward (clockwise) reduces air supply, thus causing low speed mixture to richen. Turning low speed mixture needles outward (counterclockwise) increases air supply and results in a leaner low speed mixture. DO NOT adjust carburetors leaner than necessary to attain reasonably smooth idling. It is preferable to set idle mixture a little RICH rather than too lean.

5. Recheck idle RPM and readjust idle speed screws, if necessary.
6. Stop engine.

MID-RANGE (JET NEEDLE) ADJUSTMENT

Each carburetor is equipped with an adjustable jet needle (located in throttle valve) which controls air/fuel mixture ratio when throttle valve is between ¼ and ¾ open (mid-range throttle settings).

Positioning of jet needle "E" ring in jet needle slots (Figure 3) determines fuel mixture ratio during mid-range throttle settings. Lean the fuel mixture at this setting by placing "E" ring in a higher slot on jet needle. Enrich the fuel mixture by placing "E" ring in a lower slot on jet needle.

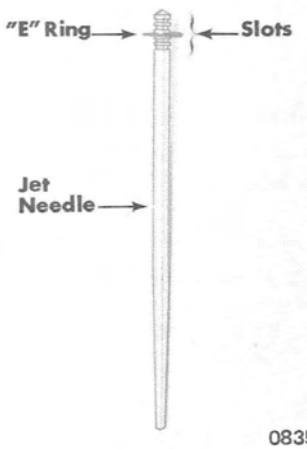

Figure 3. Carburetor Jet Needle

Jet needle "E" rings were positioned in the following slots when snowmobiles were shipped from the factory:

340 S/T - 4th slot from top of jet needle
440 S/T - 2nd slot from top of jet needle

Factory settings for jet needle "E" rings WILL BE SUITABLE for operation under MOST CONDITIONS. If readjustment of jet needles is necessary, keep in mind that it is preferable to have jet needles adjusted a little rich rather than too lean. Be sure that both jet needles are adjusted to same setting. If readjustment is necessary, refer to "Disassembly and Cleaning", following.

CAUTION: Improperly adjusted jet needles (too lean) may result in serious engine damage. DO NOT RE-ADJUST jet needles to a LEANER setting, particularly if snowmobile will be used for trail riding and/or slow speed applications.

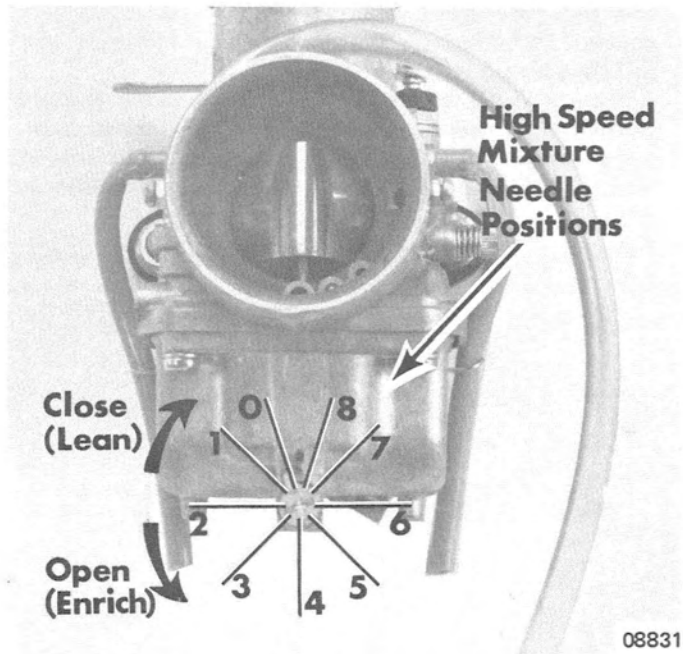

Figure 4A. High Speed Mixture Needle Positions

HIGH SPEED ADJUSTMENT

Each carburetor is equipped with an adjustable high speed mixture needle (Figure 4A) in addition to a fixed high speed jet (located inside carburetor float bowl).

The standard, factory-installed, fixed high speed jet is a No. 320 in carburetors of both 340 S/T and 440 S/T Snowmobiles. Two (2) No. 220 fixed high speed jets are also supplied with your snowmobile (placed in "Warranty Bag").

When the high speed mixture needles are closed (clockwise as far as possible - Figure 4A), fuel is metered thru the fixed high speed jet only. As the high speed mixture needles are opened (turned counterclockwise), additional fuel (in addition to fuel metered thru fixed jet) is metered to the main discharge nozzles.

An increase in temperature and/or elevation will require leaning of high speed mixture [readjusting high speed mixture needles and/or installing smaller fixed high speed jets (No. 220)], and a decrease in temperature and/or elevation will require richening of high speed mixture [readjusting high speed mixture needles and/or installing larger fixed high speed jets (No. 320)] to maintain maximum engine performance and prevent possible engine damage. (Refer to "340 S/T and 440 S/T Reference No. - Elevation/Temperature Chart" and "340 S/T High Speed Mixture Needle Position/Fixed High Speed Jet Graph" or "440 S/T High Speed Mixture Needle Position/ Fixed High Speed Jet Graph", following.)

Information in the following "Elevation/Temperature Chart" is general in nature and intended only as a guide in determining proper high speed adjustment for conditions of operation. When adjusting carburetors, keep in mind that many factors, such as temperature, elevation, humidity and terrain, have a marked effect on engine performance which could result in deviations from this guide.

Adjust the carburetor high speed mixture as follows: (1) Refer to the "Elevation/Temperature Chart" and determine the "Reference No." for conditions of operation, (2) refer to "340 S/T High Speed Mixture Needle Position/Fixed High Speed Jet Graph" or "440 S/T High Speed Mixture Needle Position/ Fixed High Speed Jet Graph" and determine the approximate positioning of the high speed mixture needles and the proper fixed high speed jets to use (No. 320 or No. 220), (3) adjust high speed mixture needles (Figure 4A) to approximate position and/or install the appropriate jets (if not installed), and (4) perform a SPARK PLUG CHECK as outlined following.

> **CAUTION: A SPARK PLUG CHECK, as outlined following, MUST BE PERFORMED to determine if carburetors are properly adjusted. Information in the following chart is general in nature and intended ONLY AS A GUIDE in determining correct high speed mixture for conditions of operation.**

After readjusting the fixed high speed mixture needles and/or changing fixed high speed jets, or if operating conditions change, a spark plug check (using good, used spark plugs with normal coloration) MUST BE MADE to maintain maximum engine performance and prevent possible engine damage. Check spark plugs as follows:

1. After thoroughly warming engine, perform a "full throttle speed run" of approximately 100 yards (91.4m).
2. Stop the engine and remove spark plugs. The proper fuel/air mixture will cause spark plug insulator tip to turn gray, tan or light brown. A lean fuel/air mixture will cause insulator tip to turn light gray or chalk white. (Readjust to a richer setting.) A rich fuel/air mixture will cause insulator tip to turn dark brown or black. (Readjust to a leaner setting.) (Figure 4A)

> **CAUTION: When in doubt about high speed mixture adjustment, ALWAYS select a "richer" setting. Carburetors, which are adjusted too "lean", will cause severe internal engine damage, while carburetors, which are too "rich", will result in only fouled spark plugs. This caution is particularly important during initial "break-in" or trail riding applications.**

3. Reinstall spark plugs and readjust high speed mixture as necessary. If carburetors are readjusted, recheck spark plugs as outlined under Steps "1" and "2", preceding, until proper mixture is attained.

340 S/T and 440 S/T REFERENCE NO. - ELEVATION/TEMPERATURE CHART

TEMPERATURE	ELEVATION									
	Up to 1000′ (305m)		1000′ (305m) - 3000′ (915m)		3000′ (905m) - 5000′ (1525m)		5000′ (1525m) - 7000′ (2135m) (* - see note below)		7000′ (2135m) - 9000′ (2745m) (* - see note below)	
	REFERENCE NO.		REFERENCE NO.		REFERENCE NO.		REFERENCE NO.		REFERENCE NO.	
	340 S/T	440 S/T	340 S/T	440 S/T	340 S/T	440 S/T	340 S/T*	440 S/T*	340 S/T*	440 S/T*
+60°F	66	65	61	62	59	58	56	54	49	52
+30°F	73	76	69	70	66	65	61	62	59	58
+30°F	73	76	69	70	66	65	61	62	59	58
0°F	82	82	78	80	73	76	69	70	66	65
0°F	82	82	78	80	73	76	69	70	66	65
-30°F	90	87	87	85	82	82	78	80	73	76

** When operating a 340 S/T or a 440 S/T Snowmobile at an elevation above 5,000 ft., the following parts must be installed (in addition to readjusting high speed mixture) to maintain maximum performance: (1) Carburetor Elevation Kit (D-1393-5872A1 for 340 S/T and D-1393-5854A1 for 440 S/T), (2) Drive Sheave Elevation Kit (D-71712A1) and (3) a smaller driver (top) sprocket.*

340 S/T HIGH SPEED MIXTURE NEEDLE POSITION/FIXED HIGH SPEED JET GRAPH

IMPORTANT: This graph is applicable only when No. 320 (factory-installed in carburetors) or No. 220 (supplied with snowmobile - placed in "Warranty Bag") fixed high speed jets are used.

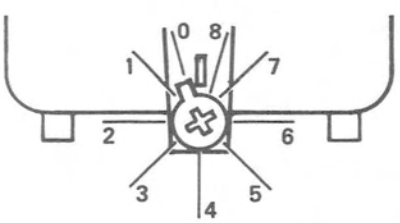

Figure 4B. High Speed Mixture Needle Positions

Use this graph as outlined following: (1) After referring to "Elevation/Temperature Chart", preceding, find applicable reference no. on vertical line (left side of graph), (2) follow straight over until "340 S/T - No. 320 Fixed High Speed Jet Line" or "340 S/T - No. 220 Fixed High Speed Jet Line" is intersected, (3) from this point (point at which either line is intersected), follow straight down to horizontal line (bottom of graph), (4) read high speed mixture needle position on horizontal line and (5) with appropriate fixed high speed jet installed in carburetors (No. 320 or No. 220 - depending on which line was intersected), set each carburetor to this position, using Figure 4A or 4B for reference.

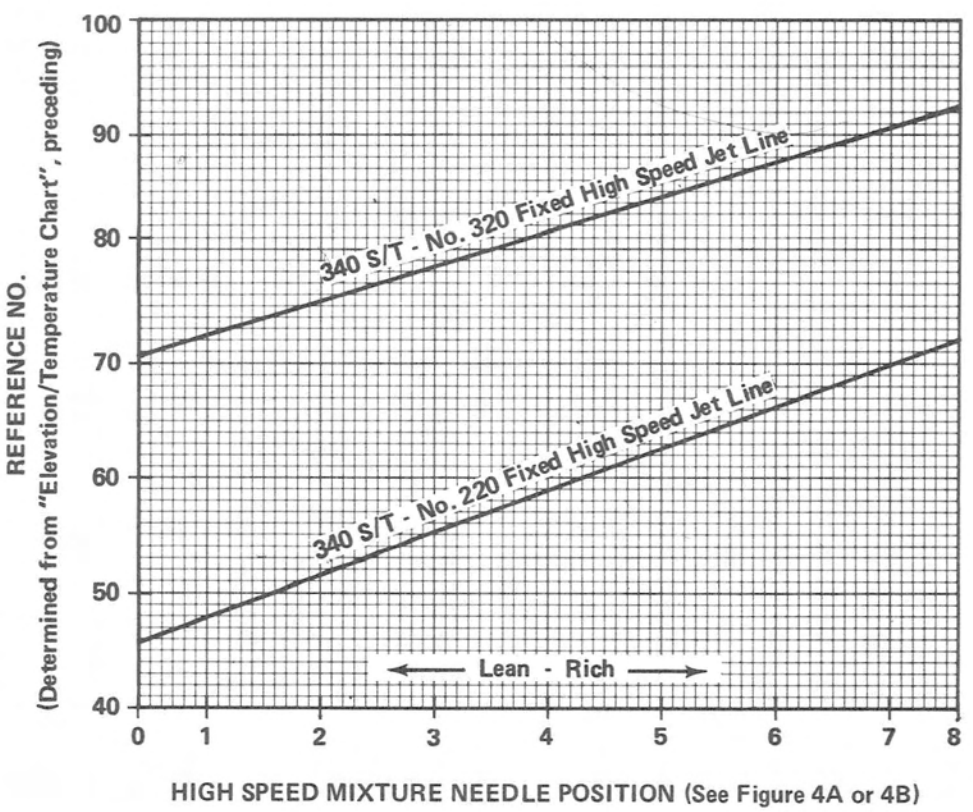

440 S/T HIGH SPEED MIXTURE NEEDLE POSITION/FIXED HIGH SPEED JET GRAPH

IMPORTANT: This graph is applicable only when No. 320 (factory-installed in carburetors) or No. 220 (supplied with snowmobile - placed in "Warranty Bag") fixed high speed jets are used.

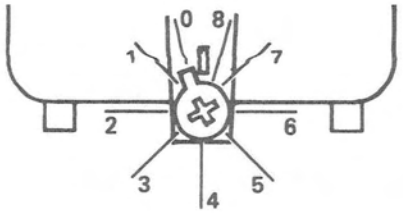

Figure 4C. High Speed Mixture Needle Positions

Use this graph as outlined following: (1) After referring to "Elevation/Temperature Chart", preceding, find applicable reference no. on vertical line (left side of graph), (2) follow straight over until "440 S/T - No. 320 Fixed High Speed Jet Line" or "440 S/T - No. 220 Fixed High Speed Jet Line" is intersected, (3) from this point (point at which either line is intersected), follow straight down to horizontal line (bottom of graph), (4) read high speed mixture needle position on horizontal line and (5) with appropriate fixed high speed jet installed in carburetors (No. 320 or No. 220 - depending on which line was intersected), set each carburetor to this position, using Figure 4A or 4C for reference.

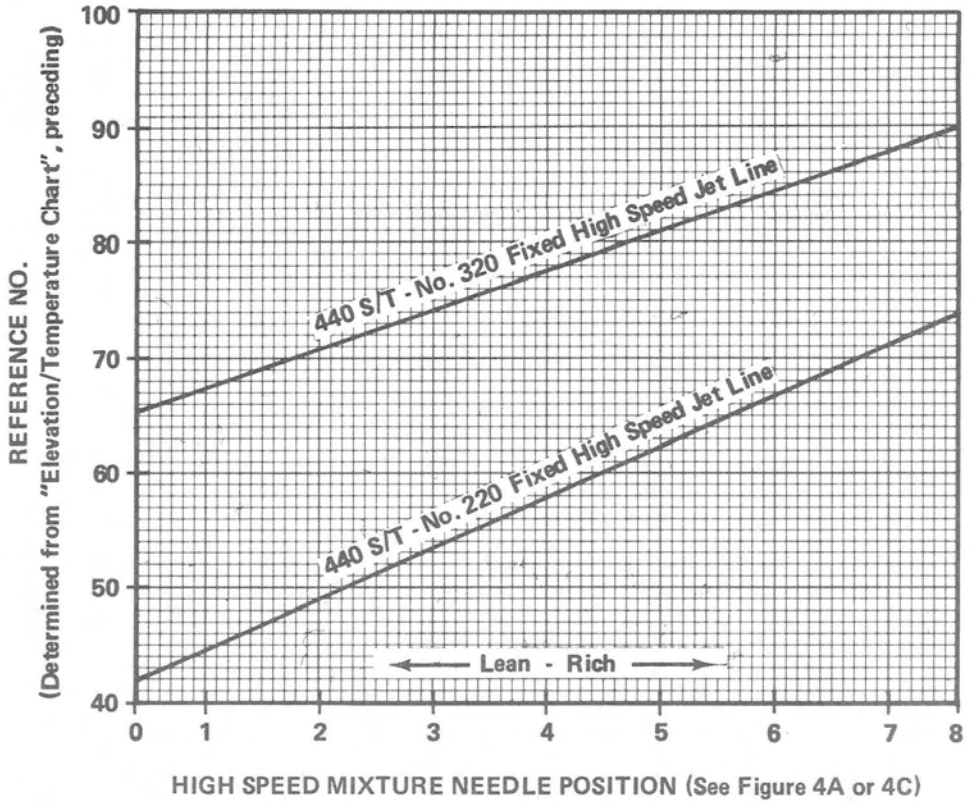

REMOVAL

1. Remove carburetor air intake silencer from carburetors.
2. Close fuel shut-off valve at fuel tank and disconnect carburetor fuel hose from fuel pump.
3. Unscrew throttle body cover from carburetor (to be removed) and remove throttle cable, body cover, spring, jet needle and throttle valve from carburetor as an assembly. (Figure 5)
4. Remove carburetor from cylinder.

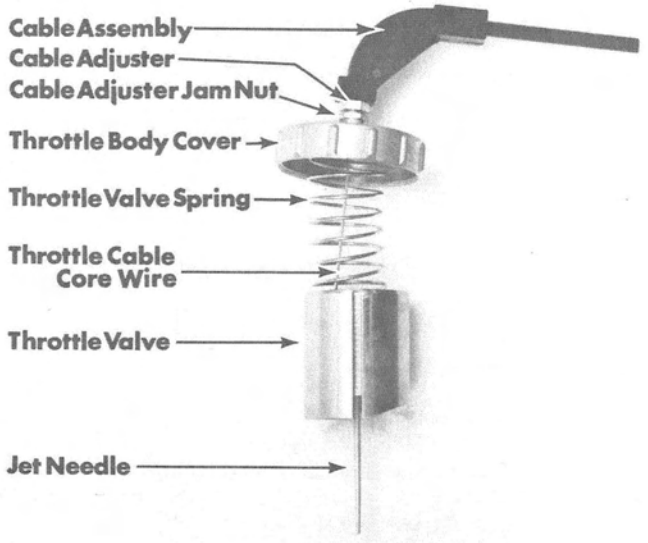

Figure 5. Carburetor Removal/Installation

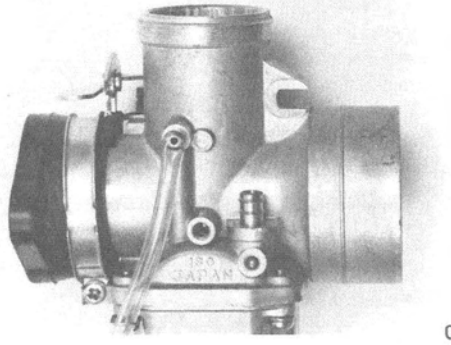

08514

1 - Throttle Cable Adjuster
2 - Cable Adjuster Jam Nut
3 - Cover Assembly
4 - Throttle Valve Spring
5 - Throttle Cable Plate
6 - "E" Ring
7 - Jet Needle
8 - Throttle Valve
9 - Rubber Cap
10 - Start Lever Retainer
11 - Start Lever and Spring
12 - Plunger Spring

32 - Screw and Lockwasher
33 - Baffle Plate
34 - Fixed High Speed Jet
35 - High Speed Mixture Needle
36 - Plastic Cap
37 - "O" Ring
38 - Tension Spring
39 - Washer
40 - Needle Jet Retainer
41 - "O" Ring
42 - Hose Retaining Plate (2)
43 - Screw and Lockwasher (4 Each)

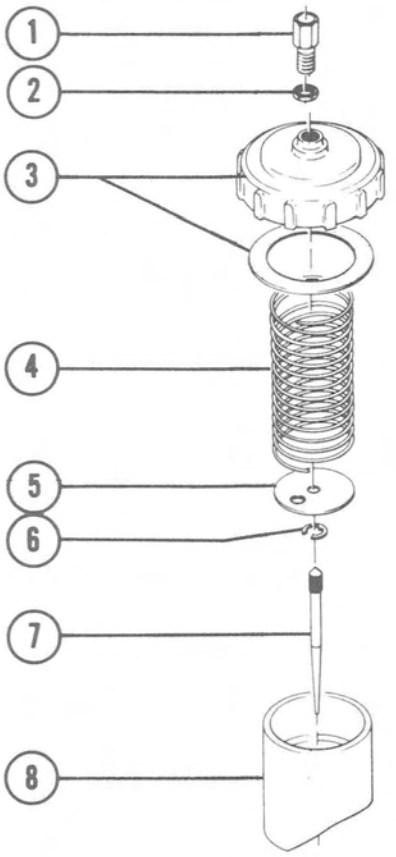

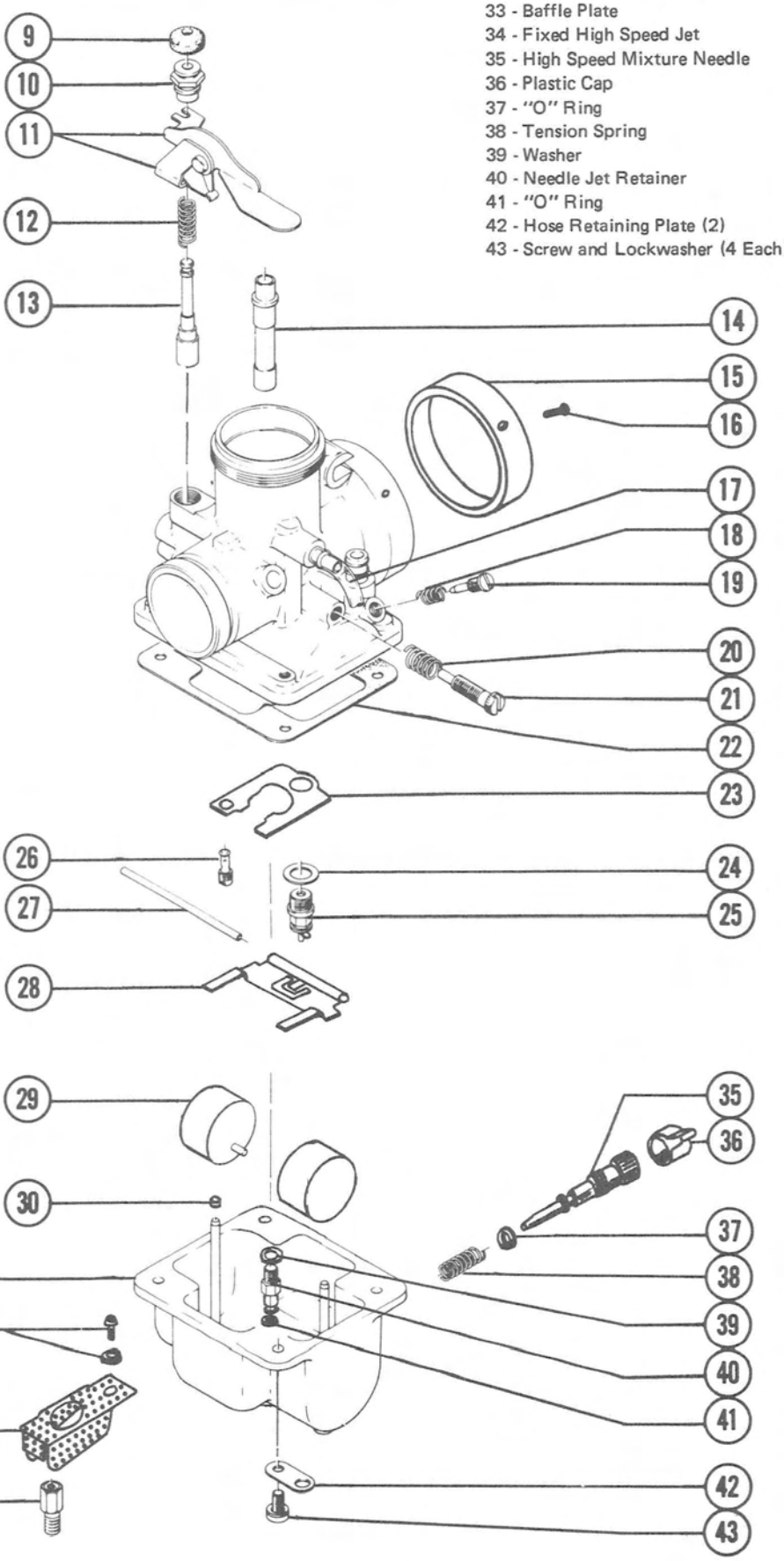

13 - Plunger
14 - Needle Jet
15 - Air Funnel - (440 S/T Only)
16 - Set Screw (2) - (440 S/T Only)
17 - Float Bowl Balance Hose (2)
18 - Tension Spring
19 - Low Speed Mixture Needle
20 - Tension Spring
21 - Idle Speed Screw
22 - Gasket
23 - Baffle Plate
24 - Gasket
25 - Inlet Seat, Inlet Needle and Retaining Clip
26 - Pilot Jet
27 - Float Lever Pin
28 - Float Lever
29 - Float (2)
30 - Retaining Cap (2)
31 - Float Bowl

Figure 6. Carburetor Assembly

DISASSEMBLY and CLEANING (Figure 6)

CAUTION: Some solvents and cleaners have a damaging effect on synthetic rubber parts used in carburetors. DO NOT use alcohol, lacquer acetone thinner, benzol or any other solvent with a blend of these ingredients, unless rubber parts and gaskets are removed. Entire carburetor should be cleaned by flushing with fuel and blown dry with compressed air BEFORE disassembly. Carburetor should be inspected for cracks in the castings and stripped threads.

1. Remove throttle cable from cover and throttle valve assembly as follows:
   a. Compress throttle valve spring (Figure 5) into cover assembly and hold.
   b. Turn throttle valve upside-down, allowing throttle cable plate and jet needle to drop out of throttle valve.
   c. Remove throttle cable core wire from throttle valve by pushing core wire toward throttle valve, sliding it over in slot and pulling it out of throttle valve. Inspect ramp on side of throttle valve, which contacts idle speed screw, for wear.
   d. Remove throttle valve spring from around core wire.
   e. Loosen cable adjuster jam nut (Figure 5), remove cable adjuster from cover and pull cable assembly from cover.
2. Remove carburetor adaptor flange from carburetor.
3. Remove and disassemble float bowl as follows:
   a. Remove 4 float bowl screws and remove float bowl and gasket from carburetor body. Inspect float bowl for cracks, nicks or dents. Replace gasket, if holes or creases exist on sealing surfaces.
   b. Check starter jet in float bowl passage to be sure that it is open and not plugged by dirt or other foreign object(s).
   c. If desired, remove floats by removing small retaining caps on float pins and lifting floats off pins.
   d. Remove baffle plate and fixed high speed jet. Inspect fixed high speed jet for damaged threads and plugged or restricted passage.
   e. Pull plastic cap off high speed mixture needle (located on side of float bowl). Remove high speed mixture needle and tension spring from float bowl. Inspect point of high speed mixture needle and threads for scratches, cuts or grooves. If mixture needle is damaged, carefully inspect float bowl. Inspect "O" ring on high speed mixture needle. If "O" ring is worn or cut, fuel may leak from float bowl.
4. Remove float lever pin and float lever. Inspect parts for wear. Float lever MUST rotate freely on pin.
5. Remove retaining clip and inlet needle from inlet seat. Remove inlet seat, gasket and baffle plate from carburetor. Carefully inspect inlet needle and inlet seat for grooves and scratches or any other condition which could result in fuel leakage past needle when "seated".

   IMPORTANT: Inlet needle and seat are a matched set. Parts MUST NOT be interchanged. If either part requires replacement, replace both.
6. Remove pilot jet from carburetor body casting. Inspect pilot jet for damaged threads and plugged or restricted orifices.
7. Remove needle jet by removing needle jet retainer and washer. Pull needle jet thru throttle valve chamber and out of carburetor. Inspect retainer and needle jet for damaged threads and plugged or restricted passages. Inspect "O" ring on needle jet retainer. If "O" ring is damaged, engine may be running rich (a result of drawing unmetered fuel from float bowl).
8. Remove start lever and plunger assembly from carburetor by removing start lever retainer and lifting assembly from carburetor passage. Remove start lever and start lever spring from retainer. Remove rubber cap from start lever retainer and pull plunger and plunger spring from retainer. Inspect rubber insert in bottom of plunger for cuts, scratches or cracks which could cause fuel leakage when plunger is seated.
9. Remove 2 float bowl balance hoses from carburetor fittings.
10. Remove low speed mixture needle (Figure 1) and tension spring from carburetor body. Inspect point of low speed mixture needle and threads for scratches, cuts or grooves. If mixture needle is damaged, carefully inspect carburetor body casting.
11. Remove idle speed screw (Figure 1) and tension spring from carburetor body. Inspect idle speed screw for damaged threads and damaged point, as a result of throttle valve hitting screw, and be sure that screw is not bent.
12. Carefully inspect carburetor body casting for cracks, stripped threads, plugged or restricted passages and passage plugs which may show signs of leakage.

    CAUTION: DO NOT push drills or wires thru passages, holes or metering jets of carburetor, as it may alter carburetor performance. Blow holes clean with compressed air.
13. Thoroughly clean all carburetor parts. Use a good grade commercial carburetor solvent. After cleaning, blow out all passages and orifices with clean compressed air. Replace all worn parts.

REASSEMBLY (Figure 6)

IMPORTANT: Make certain that all parts are kept clean during reassembly of carburetor.

1. Install tension spring and idle speed screw. (Figure 1)
2. Install tension spring and low speed mixture needle. (Figure 1)

   CAUTION: DO NOT turn low speed mixture needle tight against seat.
3. Install 2 float bowl balance hoses on carburetor fittings.

4. Place plunger spring around plunger and install in start lever retainer. Install rubber cap over plunger shaft and into groove in retainer. Place start lever spring and start lever in position on start lever retainer. Install start lever and plunger assembly into carburetor.

   NOTE: Dimple on start lever spring should be aligned with hole in start lever assembly.

5. Install needle jet (fits one way only) into carburetor and secure with washer and needle jet retainer. If removed, install "O" ring on needle jet retainer.
6. Install pilot jet into carburetor body.
7. Install baffle plate, inlet seat gasket and inlet seat. Place inlet needle in inlet seal and secure in position with retaining clip.

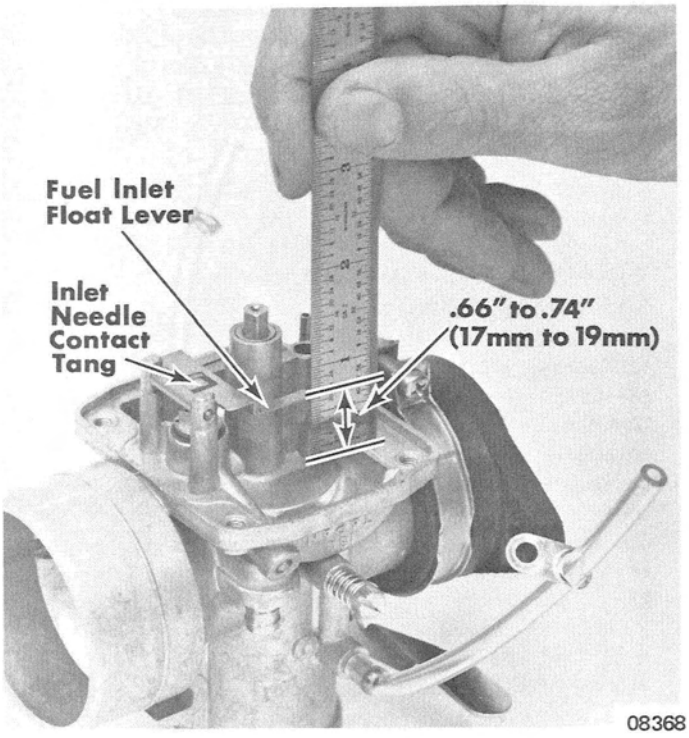

Figure 7. Float Lever Adjustment

8. Install float lever and secure in place with float lever pin. Check float lever adjustment, as shown in Figure 7, and adjust as necessary. Float lever, when properly adjusted, should be .66" to .74" (17mm to 19mm) from gasket surface of carburetor bowl (with gasket removed) to top edge of float lever with inlet needle closed. (Figure 7)
9. Reassemble float bowl as follows:
   a. Install fixed high speed jet and baffle plate in bottom of float bowl.
   b. If removed, install "O" ring on high speed mixture needle. Install tension spring and high speed mixture needle in float bowl. Turn high speed mixture needle inward (clockwise) until it seats lightly.
      Without moving mixture needle, install plastic cap on mixture needle so that "stop" on cap is tight against left side of "stop" on float bowl. (Figure 4A)
   c. Place floats on float pins with ends marked "UP" toward carburetor body. Secure floats with small retaining caps.
   d. Place gasket and float bowl assembly in position and secure with 4 lockwashers and 4 screws.

   NOTE: Two float bowl screws on cylinder side of carburetor should have hose retaining plates installed beneath lockwashers.

10. Install carburetor adaptor flange on carburetor. Tighten flange clamp securely.

> **CAUTION: Carburetor adaptor flanges MUST BE installed correctly. Serious internal engine damage may result if adaptors are installed upside-down.**

11. Reinstall throttle cable in cover and throttle valve assembly as follows:
    a. Insert throttle cable core wire thru hole in cover and install cover on cable adjuster. DO NOT tighten cable adjuster or adjuster jam nut at this time.
    b. Place throttle valve spring around throttle cable core wire. Compress spring into cover assembly and hold in this position.
    c. Install throttle cable core wire into throttle valve by inserting core wire thru hole in throttle valve, sliding cable over in slot and pulling back into recess.
    d. Refer to "Mid-Range (Jet Needle) Adjustment", preceding, and check location of "E" ring in jet needle slots. (Figure 3)
    e. Install jet needle in throttle valve. Place throttle cable plate in throttle valve. Be sure that throttle cable plate is properly positioned on top of jet needle and with flange on plate inserted in throttle cable core wire slot to prevent core wire from moving over in slot.
    f. Release throttle valve spring into throttle valve. When spring is properly positioned, it will hold throttle cable plate and jet needle securely in throttle valve.

INSTALLATION

1. Install carburetor on engine cylinder.
2. Install throttle valve and cover assembly into carburetor. (Figure 5) Tighten throttle body cover securely.

> **WARNING: BE SURE that throttle valve is installed all the way into carburetor throat. If throttle valve is installed improperly, guide pin will hold throttle valve open, resulting in a full throttle condition. Serious damage may result if snowmobile engine is started when carburetors are improperly assembled.**

NOTE: Throttle valve fits one-way only. Pin in carburetor body rides in slot on side of throttle valve when valve is properly positioned. If desired, throttle body cover may be "safety-wired" to prevent loosening.

3. Connect fuel hose to fuel pump and open fuel shut-off valve at fuel tank.
4. Refer to "Carburetor Throttle Valve Synchronization", preceding, and synchronize throttle valves.
5. Refer to "Starting Adjustments", preceding, and adjust carburetor(s) to initial settings.
6. Install carburetor air intake silencer on carburetors.
7. Refer to "Idle Adjustments" and "High Speed Adjustment", preceding, and perform final carburetor adjustments.
8. Close top cowl.

MIKUNI "VM 32-91", "VM 36-25" and "VM 36-34" CARBURETORS

MODELS 340 T/T and 440 T/T

GENERAL

Mercury 340 T/T and 440 T/T Snowmobiles use dual Mikuni VM series carburetors (a high performance tuning carburetor which incorporates an independent float system that is effective in maintaining a constant fuel level). These carburetors are equipped with adjustable low speed mixture needles, adjustable jet needles (mid-range) and fixed high speed jets. Fuel is supplied to carburetors by an external, chassis-mounted fuel pump.

ADJUSTMENTS

CARBURETOR THROTTLE VALVE SYNCHRONIZATION

1. Remove carburetor air intake silencer from carburetors and turn idle speed screws (Figure 1) on carburetors outward (counterclockwise) until they no longer contact throttle valves.
2. Actuate throttle control lever while checking throttle valves for simultaneous movement. If one throttle valve moves before other throttle valve, an adjustment of throttle cables is necessary. Adjust throttle cables as follows:

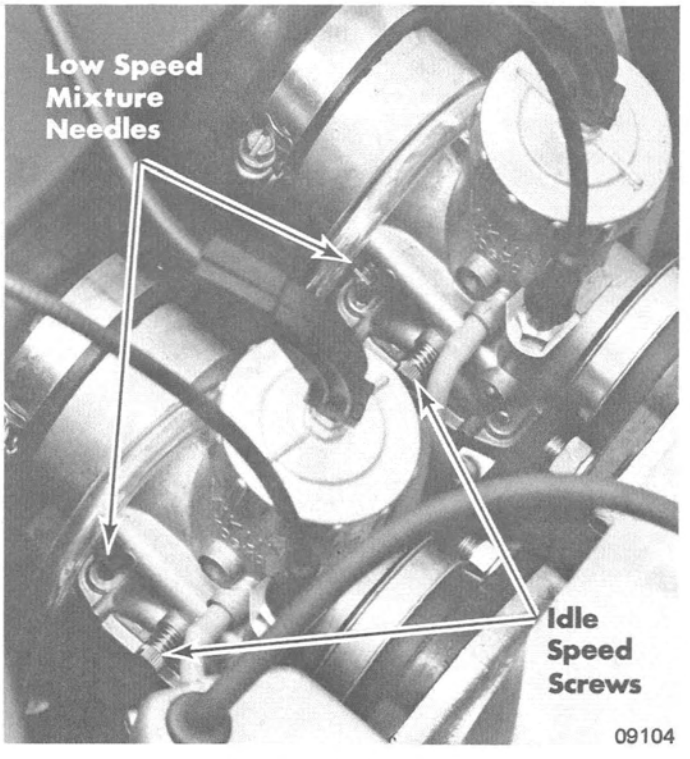

Figure 1. Carburetors

   a. Loosen cable adjuster jam nut on each carburetor. (Figure 2)
   b. Turn cable adjuster(s) (Figure 2) until both throttle valves are synchronized (move at same time), and "slack" is removed from cables.
   c. Tighten cable adjuster jam nut on each carburetor.
   d. Refer to "Starting Adjustment", following, and set idle speed screws.
3. Reinstall carburetor air intake silencer.

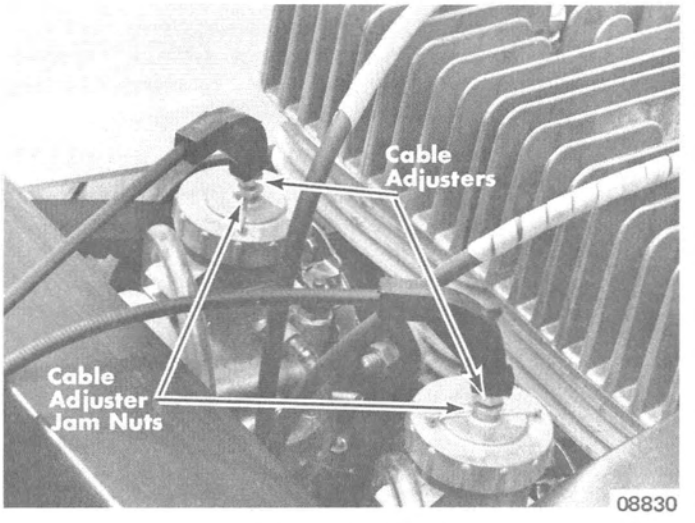

Figure 2. Cable Adjusters

4. Refer to "Idle Adjustments", following, and check idle speed.

STARTING ADJUSTMENTS

1. Synchronize carburetors as outlined under "Carburetor Throttle Valve Synchronization", preceding.
2. Initial low speed mixture should be adjusted as follows:
   a. Turn low speed mixture needles (Figure 1) inward (clockwise) until they seat lightly.
   b. Turn low speed mixture needles back out 1½-turns.
3. Initial idle speed setting should be adjusted as follows:
   a. Turn idle speed screws (Figure 1) outward (counterclockwise) until they no longer contact throttle valves.
   b. Turn idle speed screws inward (clockwise) until they "just touch" carburetor throttle valves, then continue to turn inward 3 full turns.

WARNING: Adjust idle speed carefully. Too high idle speed may cause drive sheave engagement and movement of snowmobile.

NOTE: Idle speed screws should be turned in equally after "just touching" throttle valves.

IDLE ADJUSTMENTS

1. Start engine and allow to "warm up" before attempting adjustment.

2. Set idle speed screws (Figure 1) to attain recommended idle RPM (refer to "Specifications" Section 8). Turn idle speed screws inward (clockwise) to increase idle RPM or outward (counterclockwise) to decrease idle RPM.

   IMPORTANT: Idle speed screws control the amount of throttle valve opening at idle setting. Idle speed screws should be adjusted identically so that each idle speed screw will make contact with its respective throttle valve.

3. With engine running at idle speed, turn low speed mixture needles inward (clockwise) until engine starts to "load up" or slow down or fire unevenly, because of an over-rich fuel mixture.
4. Slowly turn low speed mixture needles outward (counterclockwise) until engine picks up speed and fires evenly.

   NOTE: Adjust one (1) carburetor at-a-time. Turn low speed mixture needles approximately 1/8-turn at-a-time, then wait sufficient time for engine to respond to this adjustment.

   IMPORTANT: Low speed mixture needles REGULATE AIR RATHER THAN FUEL at idle speed. Turning the low speed mixture needles inward (clockwise) reduces air supply, thus causing low speed mixture to richen. Turning low speed mixture needles outward (counterclockwise) increases air supply and results in a leaner low speed mixture. DO NOT adjust carburetors leaner than necessary to attain reasonably smooth idling. It is preferable to set idle mixture a little RICH rather than too lean.

5. Recheck idle RPM and readjust idle speed screws, if necessary.
6. Stop engine.

MID-RANGE (JET NEEDLE) ADJUSTMENT

Each carburetor is equipped with an adjustable jet needle (located in throttle valve) which controls air/fuel mixture ratio when throttle valve is between ¼ and ¾ open (mid-range throttle settings).

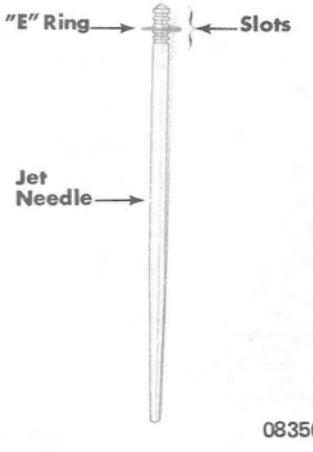

Figure 3. Carburetor Jet Needle

Positioning of jet needle "E" ring in jet needle slots (Figure 3) determines fuel mixture ratio during mid-range throttle settings. Lean the fuel mixture at this setting by placing "E" ring in a higher slot on jet needle. Enrich the fuel mixture by placing "E" ring in a lower slot on jet needle. Jet needle "E" rings were positioned in the following slots when snowmobiles were shipped from the factory:

440 T/T (Chassis Serial No. 4210249 and Below)	- 3rd slot from top of jet needle
340 T/T	- 2nd slot from top of jet needle
440 T/T (Chassis Serial No. 4347125 and Above)	- 4th slot from top of jet needle

Factory settings for jet needle "E" rings WILL BE SUITABLE for operation under MOST CONDITIONS. If readjustment of jet needles is necessary, keep in mind that it is preferable to have jet needles adjusted a little rich rather than too lean. Be sure that both jet needles are adjusted to same setting. If readjustment is necessary, refer to "Disassembly and Cleaning", following.

CAUTION: Improperly adjusted jet needles (too lean) may result in serious engine damage. DO NOT RE-ADJUST jet needles to a LEANER setting, particularly if snowmobile will be used for trail riding and/or slow speed applications.

HIGH SPEED ADJUSTMENT

1. Each carburetor is equipped with a replaceable fixed high speed jet. Fixed high speed jet is located in carburetor float bowl and is visible when plug and fiber washer are removed from float bowl. (Figure 4) Each jet is stamped with a number which indicates maximum amount of fuel flow that it can meter; i.e., No. 270 (stamped on jet) indicates that 270cc of fuel can be metered thru that jet in one (1) minute.

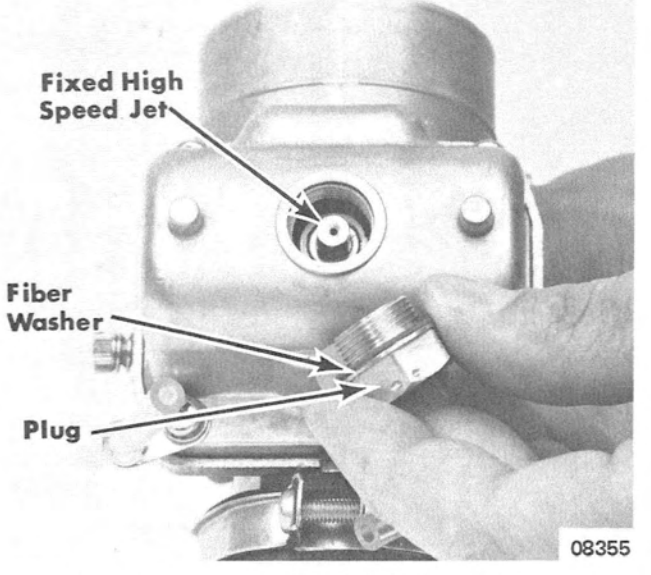

Figure 4. Carburetor Fixed High Speed Jet

   High speed adjustment (changing jets) is not required unless snowmobile will be operated at an elevation above 5,000 ft. (1,524m). Refer to Sections 8 and 2D for carburetor jet sizes and recommendations.

2. Carburetor elevation kits (D-1393-6150A1 for 340 T/T and D-1393-5874A2 for 440 T/T's) and sprocket options are available as optional equipment for high elevation operation. Refer to "Chassis" Section 2D for available sprockets.

REMOVAL

1. Remove carburetor air intake silencer from carburetors.
2. Close fuel shut-off valve at fuel tank and disconnect carburetor fuel hose from fuel pump.
3. Unscrew throttle body cover from carburetor (to be removed) and remove throttle cable, body cover, spring, jet needle and throttle valve from carburetor as an assembly. (Figure 5)
4. Unscrew starter plunger retainer from carburetor (to be removed) and remove choke cable, cable adjuster, retainer, washer, spring and plunger as an assembly.
5. Remove carburetor from cylinder.

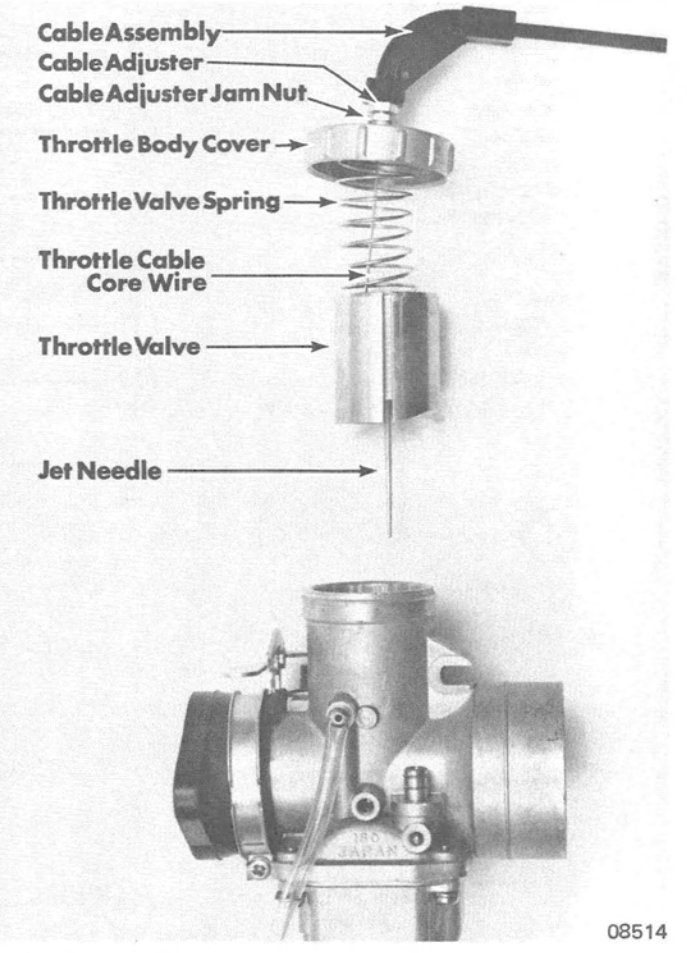

Figure 5. Carburetor Removal/Installation

1 - Cover Assembly
2 - Throttle Valve Spring
3 - Throttle Cable Plate
4 - "E" Ring
5 - Jet Needle
6 - Throttle Valve
7 - Rubber Cap
8 - Choke Cable Adjuster
9 - Cable Adjuster Jam Nut
10 - Choke Plunger Retainer
11 - Washer
12 - Spring
13 - Plunger
14 - Baffle Plate
15 - Pilot Jet
16 - Float Lever Pin
17 - Retaining Cap (2) - (440 T/T's Only)

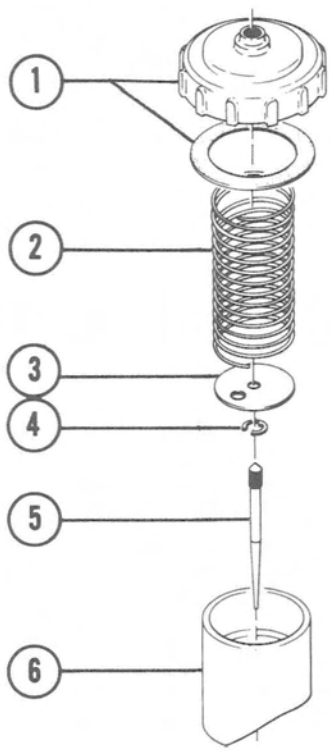

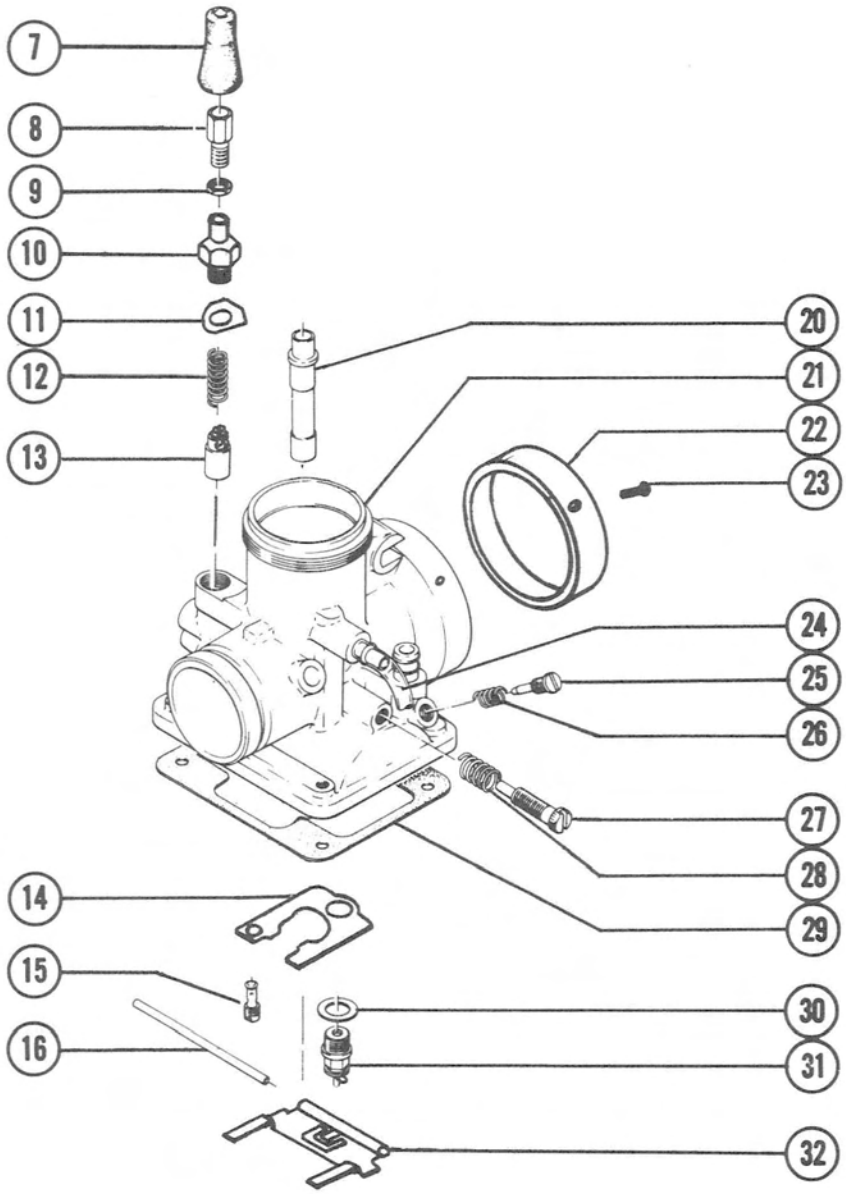

18 - Gasket
19 - Plug
20 - Needle Jet
21 - Carburetor Body
22 - Air Funnel - (440 T/T's Only)
23 - Set Screw (2) - (440 T/T's Only)
24 - Float Bowl Balance Hose (2)
25 - Low Speed Mixture Needle
26 - Tension Spring
27 - Idle Speed Screw
28 - Tension Spring
29 - Gasket
30 - Gasket
31 - Inlet Seat, Inlet Needle and Retaining Clip
32 - Float Lever
33 - Float (2)
34 - Washer
35 - Fixed High Speed Jet
36 - Float Bowl
37 - Hose Retaining Plate (2)
38 - Lockwasher and Screw (4 Each)

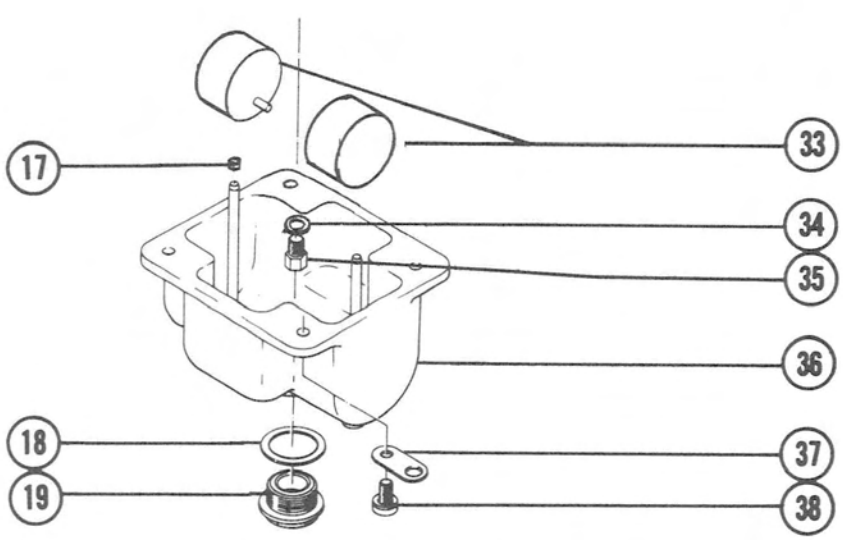

Figure 6. Carburetor Assembly

DISASSEMBLY and CLEANING (Figure 6)

CAUTION: Some solvents and cleaners have a damaging effect on synthetic rubber parts used in carburetors. DO NOT use alcohol, lacquer acetone thinner, benzol or any other solvent with a blend of these ingredients, unless rubber parts and gaskets are removed. Entire carburetor should be cleaned by flushing with fuel and blown dry with compressed air BEFORE disassembly. Carburetor should be inspected for cracks in the castings and stripped threads.

1. Remove throttle cable from cover and throttle valve assembly as follows:
   a. Compress throttle valve spring (Figure 5) into cover assembly and hold.
   b. Turn throttle valve upside-down, allowing throttle cable plate and jet needle to drop out of throttle valve.
   c. Remove throttle cable core wire from throttle valve by pushing core wire toward throttle valve, sliding it over in slot and pulling it out of throttle valve. Inspect ramp on side of throttle valve, which contacts idle speed screw, for wear.
   d. Remove throttle valve spring from around core wire.
   e. Loosen cable adjuster jam nut (Figure 5), remove cable adjuster from cover and pull cable assembly from cover.
2. Remove carburetor adaptor flange from carburetor.
3. Remove 4 float bowl screws and remove float bowl and gasket from carburetor body. Inspect float bowl for cracks, nicks or dents. Replace gasket, if holes or creases exist on sealing surfaces. Check starter jet in float bowl passage to be sure that it is open and not plugged by dirt or other foreign object(s). If desired, remove floats by removing small retaining caps (if so equipped) on float pins and lifting floats off pins. Remove fuel drain plug and gasket from bottom of float bowl.
4. Remove float lever pin and float lever. Inspect parts for wear. Float lever MUST rotate freely on pin.
5. Remove retaining clip and inlet needle from inlet seat. Remove inlet seat, gasket and baffle plate from carburetor. Carefully inspect inlet needle and seat for grooves and scratches or any other condition which could result in fuel leakage past needle when "seated".

   IMPORTANT: Inlet needle and seat are a matched set. Parts MUST NOT be interchanged. If either part requires replacement, replace both.
6. Remove pilot jet from carburetor body casting. Inspect pilot jet for damaged threads and plugged or restricted orifices.
7. Remove needle jet by removing fixed high speed jet and washer. Pull needle jet thru throttle valve chamber and out of carburetor. Inspect fixed high speed jet and needle jet for damaged threads and plugged or restricted passages.
8. Remove 2 float bowl balance hoses from carburetor fittings.
9. Remove low speed mixture needle (Figure 1) and tension spring from carburetor body. Inspect point of low speed mixture needle and threads for scratches, cuts or grooves. If mixture needle is damaged, carefully inspect carburetor body casting.
10. Remove idle speed screw (Figure 1) and tension spring from carburetor body. Inspect idle speed screw for damaged threads and damaged point, as a result of throttle valve hitting screw, and be sure that screw is not bent.
11. Carefully inspect carburetor body casting for cracks, stripped threads, plugged or restricted passages and passage plugs which may show signs of leakage.

CAUTION: DO NOT push drills or wires thru passages, holes or metering jets of carburetor, as it may alter carburetor performance. Blow holes clean with compressed air.

12. Thoroughly clean all carburetor parts. Use a good grade commercial carburetor solvent. After cleaning, blow out all passages and orifices with clean compressed air. Replace all worn parts.

REASSEMBLY (Figure 6)

IMPORTANT: Make certain that all parts are kept clean during reassembly of carburetor.

1. Install tension spring and idle speed screw. (Figure 1)
2. Install tension spring and low speed mixture needle. (Figure 1)

CAUTION: DO NOT turn low speed mixture needle tight against seat.

3. Install 2 float bowl balance hoses on carburetor fittings.
4. Install needle jet (fits one way only) into carburetor and secure with washer and fixed high speed jet.
5. Install pilot jet into carburetor body.
6. Install baffle plate, inlet gasket and inlet seat. Place inlet needle in inlet seat and secure in position with retaining clip.
7. Install float lever and secure in place with float lever pin. Check float lever adjustment, as shown in Figure 7, and adjust as necessary. Float lever settings, when properly adjusted, should be:

   340 T/T - .86" to .94" (22mm to 24mm)
   440 T/T's - .66" to .74" (17mm to 19mm)

   Settings are measured from gasket surface of carburetor bowl (with gaskets removed) to top edge of float lever with inlet needle closed. (Figure 7)
8. Install gasket and fuel drain plug in bottom of carburetor float bowl. Place floats on float pins with ends marked "UP" toward carburetor body. Secure floats with small retaining caps, if so equipped. Place gasket and float bowl assembly in position and secure with 4 screws and 4 lockwashers.

NOTE: Two float bowl screws on cylinder side of carburetor should have hose retaining plates installed beneath lockwashers.

9. Install carburetor adaptor flange on carburetor. Tighten flange clamp securely.

> CAUTION: **Carburetor adaptor flanges MUST BE installed correctly. Serious internal engine damage may result if adaptors are installed upside-down.**

10. Reinstall throttle cable in cover and throttle valve assembly as follows:
    a. Insert throttle cable core wire thru hole in cover and install cover on cable adjuster. DO NOT tighten cable adjuster or adjuster jam nut at this time.
    b. Place throttle valve spring around throttle cable core wire. Compress spring into cover assembly and hold in this position.
    c. Install throttle cable core wire into throttle valve by inserting core wire thru hole in throttle valve, sliding cable over in slot and pulling back into recess.
    d. Refer to "Mid-Range (Jet Needle) Adjustment", preceding, and check location of "E" ring in jet needle slots. (Figure 3)
    e. Install jet needle in throttle valve. Place throttle cable plate in throttle valve. Be sure that throttle cable plate is properly positioned on top of jet needle and with flange on plate inserted in throttle cable core wire slot to prevent core wire from moving over in slot.

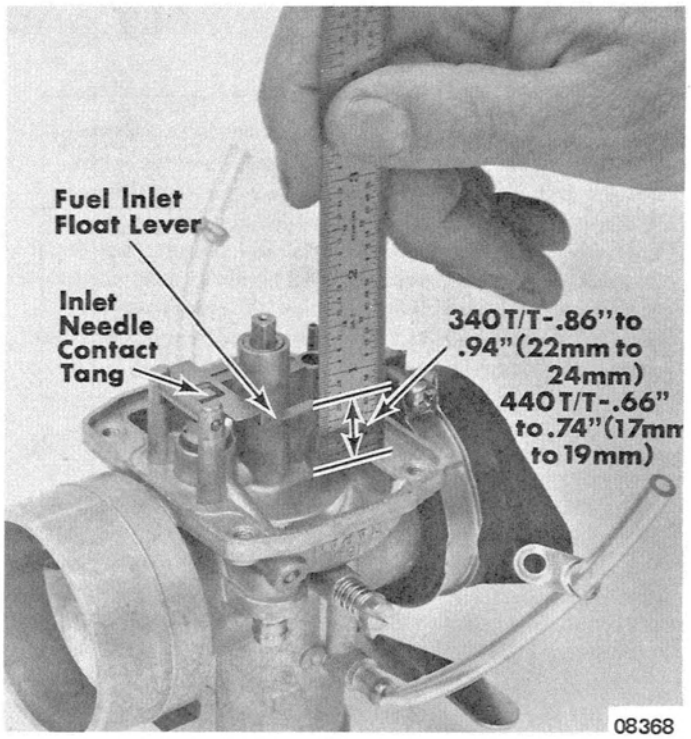

Figure 7. Float Lever Adjustment

    f. Release throttle valve spring into throttle valve. When spring is properly positioned, it will hold throttle cable plate and jet needle securely in throttle valve.

INSTALLATION

1. Install carburetor on engine cylinder.
2. Install throttle valve and cover assembly into carburetor. (Figure 5) Tighten throttle body cover securely.

> WARNING: **BE SURE that throttle valve is installed all the way into carburetor throat. If throttle valve is installed improperly, guide pin will hold throttle valve open, resulting in a full throttle condition. Serious damage may result if snowmobile engine is started when carburetors are improperly assembled.**

NOTE: Throttle valve fits one-way only. Pin in carburetor body rides in slot on side of throttle valve when valve is properly positioned. If desired, throttle body cover may be "safety-wired" to prevent loosening.

3. Install plunger and choke adjuster assembly into carburetor. Tighten starter plunger retainer securely. Refer to Section 7A, and check adjustment of choke cables.
4. Connect fuel hose to fuel pump and clamp securely. Open fuel shut-off valve at fuel tank.
5. Refer to "Carburetor Throttle Valve Synchronization", preceding, and synchronize throttle valves.
6. Refer to "Starting Adjustments", preceding, and adjust carburetor(s) to initial settings.
7. Install carburetor air intake silencer on carburetors.
8. Refer to "Idle Adjustments" and "High Speed Adjustment", preceding, and perform final carburetor adjustments.
9. Close top cowl.